MASSACHUSETTS DEPARTMENT OF TRANSPORTATION
HIGHWAY DIVISION

SHARON MASKWONICUT STREET OVER AMTRAK/MBTA			
STATE	FED. AID PROJ. NO.	SHEET NO.	TOTAL SHEETS
MA	-	1	86
PROJECT FILE NO.	608079		

TITLE SHEET & INDEX

TITLE SHEET.DWG Plotted on 18-Dec-2020 1:50 AM

PLAN AND PROFILE OF

MASKWONICUT STREET OVER AMTRAK/MBTA

(BRIDGE NO. S-09-003)

IN THE TOWN OF

SHARON

NORFOLK COUNTY

FEDERAL AID PROJECT NO.

100% SUBMITTAL

THESE PLANS ARE SUPPLEMENTED BY THE MASSACHUSETTS HIGHWAY DEPARTMENT STANDARD SPECIFICATIONS FOR HIGHWAYS AND BRIDGES DATED 2020, THE SUPPLEMENTAL SPECIFICATIONS DATED MARCH 31, 2020, THE INTERIM SUPPLEMENTAL SPECIFICATIONS CONTAINED IN THESE PROJECT DOCUMENTS, THE OCTOBER 2017 CONSTRUCTION STANDARD DETAILS, THE 2015 OVERHEAD SIGNAL STRUCTURE AND FOUNDATION STANDARD DRAWINGS, MASSDOT TRAFFIC MANAGEMENT PLANS AND DETAIL DRAWINGS, THE 1990 STANDARD DRAWINGS FOR SIGNS AND SUPPORTS, THE 1968 STANDARD DRAWINGS FOR TRAFFIC SIGNALS AND HIGHWAY LIGHTING, AND THE LATEST EDITION OF THE AMERICAN STANDARD FOR NURSERY STOCK.

INDEX

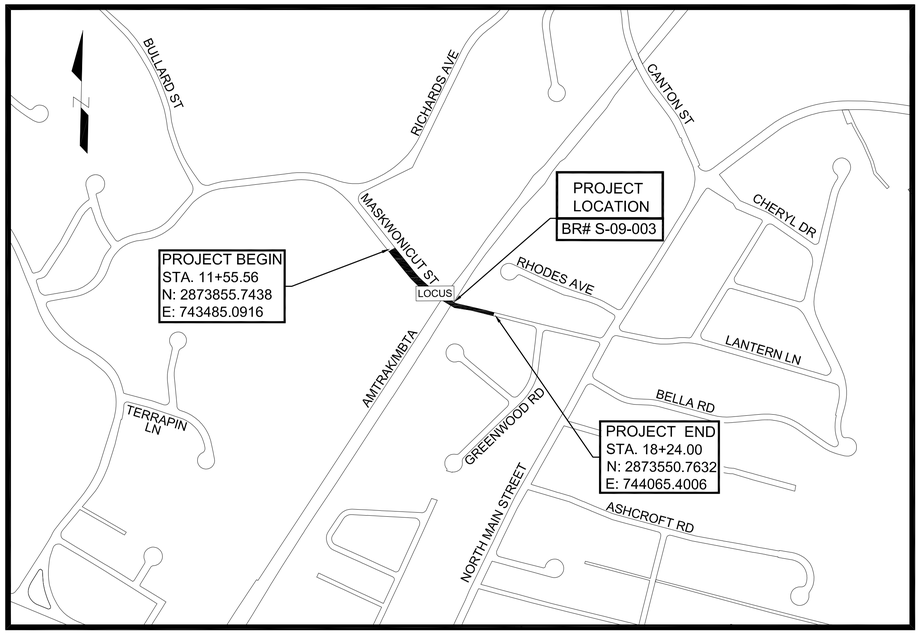

0 500 1000 1500 2000

SCALE: 1" = 500'

LENGTH OF PROJECT = 668.44 FEET = 0.127 MILES

DECEMBER 2020

DESIGN DESIGNATION (MASKWONICUT STREET)

DESIGN SPEED	30 MPH
ADT (2012)	2115*
ADT (2032)	2580
K	N/A
D	N/A
T (PEAK HOUR)	N/A
T (AVERAGE DAY)	N/A
DHV	N/A
DDHV	N/A
FUNCTIONAL CLASSIFICATION	URBAN LOCAL ROAD

*ADT PROVIDED BY TOWN OF SHARON

DATE	DESCRIPTION	REV #

Weston & Sampson

55 Walkers Brook Drive, Suite 100
Reading, MA 01867

978.532.1900
www.westonandsampson.com

massDOT
Massachusetts Department of Transportation
Highway Division

APPROVED

CHIEF ENGINEER DATE

GENERAL NOTES:

1. THE EXISTING CONDITIONS SHOWN ON THIS BASE MAP ARE THE RESULT OF AN ON THE GROUND INSTRUMENT SURVEY PERFORMED BETWEEN FEBRUARY 24, 2016 AND JUNE 19, 2016 BY GREEN INTERNATIONAL AFFILIATES, INC. (GREEN). SEE FIELD NOTES IN MASSDOT DISTRICT 5 FIELD BOOK 23140.

2. HORIZONTAL AND VERTICAL CONTROL WAS ESTABLISHED BY MASSDOT SURVEY, IN MASSDOT DISTRICT 5 FIELD BOOK 41023, PAGE 54, ON FEBRUARY 1, 2016. HORIZONTAL DATUM IS BASED ON THE MASSACHUSETTS STATE PLANE COORDINATE SYSTEM, NAD83 (2011) EPOCH 2010.0000, VERTICAL DATUM IS NAVD 88 (COMPUTED USING GEOID12B) USING THE FOLLOWING CONTROL POINTS:

POINT	GRID NORTHING	GRID EASTING	ELEVATION	COMBINED GROUND TO GRID SCALE FACTOR
438J	2864449.911	775868.327	245.671	0.999958568423204
FB 1	2858055.940	727416.672	289.325	0.999957047669442
MAMI	2924486.126	778315.376	34.464	0.999968068085586
ST30	2875616.308	751292.903	167.118	0.999961604092353

MASSDOT ESTABLISHED THE FOLLOWING POINTS FOR THIS PROJECT:

POINT	GRID NORTHING	GRID EASTING	ELEVATION	DESCRIPTION
1655	2873595.916	744981.403	233.257	PUNCH POINT IN IR
1656	2873192.037	744752.925	247.654	PUNCH POINT IN IR

THE UNIT OF MEASUREMENTS IS US FEET. THE PROJECT COMBINED SCALE FACTOR IS 0.999957889430187. BEARINGS ARE ROTATED 11°27'00" CCW FROM THE BEARINGS AS SHOWN ON PLAN NO. 314-1962, PLAN BOOK 212.

3. THE LOCATIONS OF EXISTING UNDERGROUND UTILITIES ARE SHOWN IN AN APPROXIMATE WAY ONLY AND HAVE NOT BEEN INDEPENDENTLY VERIFIED BY THE OWNER OR ITS REPRESENTATIVE. THE CONTRACTOR SHALL DETERMINE THE EXACT LOCATION OF ALL EXISTING UTILITIES BEFORE COMMENCING WORK, AND AGREES TO BE FULLY RESPONSIBLE FOR ANY AND ALL DAMAGES WHICH MIGHT BE OCCASIONED BY THE CONTRACTOR'S FAILURE TO EXACTLY LOCATE AND PRESERVE ANY AND ALL UNDERGROUND UTILITIES. THE CONTRACTOR SHALL DIG TEST PITS WITH THE LOCATIONS BEING APPROVED BY THE ENGINEER PRIOR TO COMMENCEMENT OF WORK TO EXACTLY LOCATE EXISTING UTILIITES.

4. WHERE AN EXISTING UTILITY IS FOUND TO CONFLICT WITH THE PROPOSED WORK, THE LOCATION, ELEVATION AND SIZE OF THE UTILITY SHALL BE ACCURATELY DETERMINED WITHOUT DELAY BY THE CONTRACTOR AND THE INFORMATION FURNISHED TO THE ENGINEER FOR RESOLUTION OF THE CONFLICT.

5. THE CONTRACTOR SHALL MAKE ALL ARRANGEMENTS FOR THE ALTERATION AND ADJUSTMENT OF GAS, ELECTRIC, TELEPHONE AND ANY OTHER PRIVATE UTILITIES BY THE UTILITY OWNER. ANY ALTERATIONS SHALL BE INCIDENTAL TO THE PROJECT. THE CONTRACTOR IS RESPONSIBLE FOR THE TEMPORARY SUPPORT OF ALL UTILITIES TO REMAIN IN PLACE AND SHALL DESCRIBE IN WRITING, TO THE SATISFACTION OF THE ENGINEER, HIS METHOD OF TEMPORARY SUPPORT.

6. AREAS OUTSIDE THE LIMITS OF PROPOSED WORK DISTURBED BY THE CONTRACTOR'S OPERATIONS SHALL BE RESTORED BY THE CONTRACTOR TO THEIR ORIGINAL CONDITION AT THE CONTRACTOR'S EXPENSE.

7. THE TERM "PROPOSED (PROP)" INDICATES WORK TO BE CONSTRUCTED USING NEW MATERIALS OR, WHERE APPLICABLE, RE-USING EXISTING MATERIALS IDENTIFIED AS "REMOVE AND RESET (R&R)".

8. ALL EXISTING STATE, COUNTY AND TOWN LOCATION LINES AND PRIVATE PROPERTY LINES HAVE BEEN ESTABLISHED FROM AVAILABLE INFORMATION AND THEIR EXACT LOCATION ARE NOT GUARANTEED.

9. ALL EXCESS MATERIAL FROM ROADWAY RECONSTRUCTION OR THE EXCAVATION PROCESS SHALL BE REUSED ON SITE OR REMOVED FROM THE SITE AND DISPOSED OF IN A LEGAL AND PROPER MANNER.

10. THE CONTRACTOR SHALL CALL DIGSAFE AT 1-888-344-7233 AT LEAST 72 HOURS, SATURDAYS, AND HOLIDAYS EXCLUDED, PRIOR TO EXCAVATING AT ANY LOCATION. A COPY OF THE DIGSAFE PROJECT REFERENCE NUMBER(S) SHALL BE GIVEN TO THE TOWN PRIOR TO EXCAVATION.

11. MASSDOT WILL GENERALLY PROVIDE SURVEY WORK AS OUTLINED IN THE 1988 STANDARD SPECIFICATIONS FOR HIGHWAYS AND BRIDGES, SECTION 5.07, CONSTRUCTION STAKINGS, PAGE 18. THE CONTRACTOR SHOULD EMPLOY QUALIFIED PERSONNEL FOR ANY ADDITIONAL LAYOUT.

12. JOINTS BETWEEN HOT MIX ASPHALT TRENCH PAVEMENT AND SAWCUT EXISTING PAVEMENT SHALL BE SEALED WITH BITUMEN AND BACKSANDED.

13. IF DEEMED NECESSARY DUE TO THE WORK, THE CONTRACTOR SHALL COORDINATE WITH THE TOWN OF SHARON HIGHWAY DEPARTMENT, THE SHARON FIRE DEPARTMENT, AND THE ENGINEER FOR APPROVAL OF SHUTTING DOWN ANY EXISTING WATER MAINS AND SHALL ALSO OBTAIN APPROVAL FOR DISRUPTING ANY EXISTING SEWER FLOWS.

14. THE CONTRACTOR SHALL BE AWARE THAT ONLY TOWN PERSONNEL ARE ALLOWED TO OPERATE WATER GATES AND HYDRANTS. ANY REQUESTS TO OPERATE THE GATES SHALL BE COORDINATED THROUGH THE ENGINEER.

15. THE CONTRACTOR SHALL COORDINATE ANY WORK FOR THE PROJECT WITH ALL ADJACENT/CONCURRENT PROJECTS AND CONTRACTORS.

16. THE CONTRACTOR SHALL INSTALL PRIOR TO COMMENCEMENT OF WORK, MAINTAIN, AND REMOVE AT THE END OF THE PROJECT INLET SEDIMENT CONTROL BAGS IN ALL CATCH BASINS, WITHIN OR ADJACENT TO THE PROJECT LIMITS. THE CONTRACTOR SHALL ALSO MAINTAIN SILT FENCE AND COMPOST FILTER TUBES AS SHOWN ON THE PLANS THROUGHOUT THE DURATION OF THE PROJECT AND REMOVE AT THE END.

17. ANY GRASS AREAS DISTURBED BY THE WORK SHALL BE RESTORED WITH LOAM AND SEED.

18. ANY LANDSCAPED AREAS DISTURBED BY THE WORK SHALL BE RESTORED TO EXISTING CONDITIONS WITH EXISTING OR NEW GROUND COVER MATERIALS AS DIRECTED BY THE ENGINEER. ANY PLANTS, SHRUBS, OR FLOWERS DISTURBED BY THE WORK SHALL BE RESET TO EXISTING CONDITIONS OR REPLACED WITH NEW PLANTS, SHRUBS, OR FLOWERS AS DIRECTED BY THE ENGINEER. ALL WORK TO RESTORE LANDSCAPE AREAS, NEW GROUND COVER MATERIALS, NEW PLANTS, NEW SHRUBS, OR NEW FLOWERS REQUIRED BY THE ENGINEER SHALL BE INCIDENTAL TO THE PROJECT.

19. CONTRACTOR TO COORDINATE WITH UTILITY POLE OWNERS IN AREAS WHERE UNDERGROUND UTILITY WORK IS WITHIN CLOSE PROXIMITY AND POSSIBLE UTILITY POLE SHORING IS REQUIRED WHILE INSTALLING PROPOSED UTILITIES.

20. RAISE AND ADJUST FRAMES AND GRATES, FRAMES AND COVERS AND GATE BOXES PRIOR TO PAVEMENT OVERLAY, IF REQUIRED.

21. CONTRACTOR IS RESPONSIBLE FOR REPLACING ANY PROPERTY PINS THAT ARE DAMAGED OR DESTROYED DURING CONSTRUCTION, TO THEIR LOCATION JUST PRIOR TO CONSTRUCTION.

22. DRAINAGE ELEVATIONS ARE PROVIDED FOR DESIGN PURPOSES ONLY. THE CONTRACTOR SHALL VERIFY BY TEST PIT, THE LOCATIONS OF EXISTING UTILITIES WHICH MAY CONFLICT WITH THE PROPOSED DRAINAGE. ANY FIELD ADJUSTMENTS REQUIRED WILL BE MADE AS APPROVED OR DIRECTED BY THE ENGINEER. ONLY AFTER THE CONTRACTOR VERIFIES ELEVATIONS OD THE CONSTRUCTABILITY OF THE DRAINAGE SYSTEM SHALL ANY STRUCTURES BE ORDERED. ANY FIELD ADJUSTMENTS TO LINE AND GRADE UP UP TO A DEPTH OF 5' SHALL BE INCLUDED IN THE COST OF THE PIPE. PIPE EXCAVATION GREATER THAN 5' WILL BE PAID UNDER CLASS B TRENCH EXCAVATION.

GENERAL SYMBOLS

EXISTING	PROPOSED	DESCRIPTION
JB	JB	JERSEY BARRIER
CB	CB	CATCH BASIN
		CATCH BASIN CURB INLET
FP	FP	FLAG POLE
GP	GP	GAS PUMP
MB	MB	MAIL BOX
		POST SQUARE
		POST CIRCULAR
WELL	WELL	WELL
EHH	EHH	ELECTRIC HANDHOLE
		FENCE GATE POST
GG	GG	GAS GATE
BHL #	BHL #	BORING HOLE
MW #	MW #	MONITORING WELL
TP #	TP #	TEST PIT
		HYDRANT
		LIGHT POLE
CO.BD.		COUNTY BOUND
		GPS POINT
		CABLE MANHOLE
		DRAINAGE MANHOLE
		ELECTRIC MANHOLE
		GAS MANHOLE
		MISC MANHOLE
		SEWER MANHOLE
		TELEPHONE MANHOLE
		WATER MANHOLE
MHB	MHB	MASSACHUSETTS HIGHWAY BOUND
MON		MONUMENT
SB		STONE BOUND
TB		TOWN OR CITY BOUND
		TRAVERSE OR TRIANGULATION STATION
TPL or GUY	TPL or GUY	TROLLEY POLE OR GUY POLE
HTP		TRANSMISSION POLE
UFB	UFB	UTILITY POLE W/ FIREBOX
UPDL	UPDL	UTILITY POLE WITH DOUBLE LIGHT
ULT	ULT	UTILITY POLE W / 1 LIGHT
UPL	UPL	UTILITY POLE
		BUSH
SIZE & TYPE		TREE
		STUMP
		SWAMP / MARSH
WG	WG	WATER GATE
PM	PM	PARKING METER
		OVERHEAD CABLE/WIRE
		CURBING
99		CONTOURS (ON-THE-GROUND SURVEY DATA)
100 99		CONTOURS (PHOTOGRAMMETRIC DATA)
		UNDERGROUND DRAIN PIPE (DOUBLE LINE 24 INCH AND OVER)
		UNDERGROUND ELECTRIC DUCT (DOUBLE LINE 24 INCH AND OVER)
		UNDERGROUND GAS MAIN (DOUBLE LINE 24 INCH AND OVER)
		UNDERGROUND SEWER MAIN (DOUBLE LINE 24 INCH AND OVER)
		UNDERGROUND TELEPHONE DUCT (DOUBLE LINE 24 INCH AND OVER)
		UNDERGROUND WATER MAIN (DOUBLE LINE 24 INCH AND OVER)
		BALANCED STONE WALL
		GUARD RAIL - STEEL POSTS
		GUARD RAIL - WOOD POSTS
x	x	CHAIN LINK OR METAL FENCE
		WOOD FENCE
		HAY BALES/SILT FENCE / COMPOST FILTER TUBE
		TREE LINE
		SAWCUT LINE
		TOP OR BOTTOM OF SLOPE
		LIMIT OF EDGE OF PAVEMENT OR COLD PLANE AND OVERLAY
		BANK OF RIVER OR STREAM
		BORDER OF WETLAND
		100 FT WETLAND BUFFER
		200 FT RIVERFRONT BUFFER
		STATE HIGHWAY LAYOUT
		TOWN OR CITY LAYOUT
		COUNTY LAYOUT
		RAILROAD SIDELINE
		TOWN OR CITY BOUNDARY LINE
		PROPERTY LINE OR APPROXIMATE PROPERTY LINE
		EASEMENT

PAVEMENT MARKINGS SYMBOLS

EXISTING	PROPOSED	DESCRIPTION
	SWL	6" SOLID WHITE LINE
	SYL	6" SOLID YELLOW LINE
	BWL	BROKEN WHITE LINE
	BYL	BROKEN YELLOW LINE
	DBYL	6" DOUBLE YELLOW LINE

ABBREVIATIONS

AADT	ANNUAL AVERAGE DAILY TRAFFIC
ABAN	ABANDON
ADJ	ADJUST
APPROX.	APPROXIMATE
A.C.	ASPHALT CONCRETE
ACCM PIPE	ASPHALT COATED CORRUGATED METAL PIPE
BIT.	BITUMINOUS
BC	BOTTOM OF CURB
BD.	BOUND
BL	BASELINE
BLDG	BUILDING
BM	BENCHMARK
BO	BY OTHERS
BOS	BOTTOM OF SLOPE
BR.	BRIDGE
CB	CATCH BASIN
CBCI	CATCH BASIN WITH CURB INLET
CC	CEMENT CONCRETE
CCM	CEMENT CONCRETE MASONRY
CEM	CEMENT
CI	CURB INLET
CIP	CAST IRON PIPE
CLF	CHAIN LINK FENCE
CL	CENTERLINE
CMP	CORRUGATED METAL PIPE
CSP	CORRUGATED STEEL PIPE
CO.	COUNTY
CONC	CONCRETE
CONT	CONTINUOUS
CONST	CONSTRUCTION
CR GR	CROWN GRADE
DHV	DESIGN HOURLY VOLUME
DI	DROP INLET
DIA	DIAMETER
DICL	DUCTILE IRON CEMENT LINED
DIP	DUCTILE IRON PIPE
DW	STEADY DON'T WALK - PORTLAND ORANGE
DWY	DRIVEWAY
ELEV (or EL.)	ELEVATION
EMB	EMBANKMENT
EOP	EDGE OF PAVEMENT
EXIST (or EX)	EXISTING
EXC	EXCAVATION
F&C	FRAME AND COVER
F&G	FRAME AND GRATE
FDN.	FOUNDATION
FLDSTN	FIELDSTONE
(FT)	FLAT TOP STRUCTURE
GAR	GARAGE
GD	GROUND
GG	GAS GATE
GI	GUTTER INLET
GIP	GALVANIZED IRON PIPE
GRAN	GRANITE
GRAV	GRAVEL
GRD	GUARD
HDPE	HIGH DENSITY POLYETHYLENE PIPE
HDW	HEADWALL
HMA	HOT MIX ASPHALT
HOR	HORIZONTAL
HYD	HYDRANT
INV	INVERT
JCT	JUNCTION
L	LENGTH OF CURVE
LB	LEACH BASIN
LP	LIGHT POLE
LT	LEFT
MAX	MAXIMUM
MB	MAILBOX
MH	MANHOLE
MHB	MASSACHUSETTS HIGHWAY BOUND
MIN	MINIMUM
NIC	NOT IN CONTRACT
NO.	NUMBER
OCS	OVERHEAD CATENARY SYSTEM
OHW	ORDINARY HIGH WATER
OW	OVERHEAD WIRES
PC	POINT OF CURVATURE
PCC	POINT OF COMPOUND CURVATURE
P.G.L.	PROFILE GRADE LINE
PI	POINT OF INTERSECTION
POC	POINT ON CURVE
POT	POINT ON TANGENT
PRC	POINT OF REVERSE CURVATURE
PROJ	PROJECT
PROP	PROPOSED
PSB	PLANTABLE SOIL BORROW
PT	POINT OF TANGENCY
PVC	POINT OF VERTICAL CURVATURE
PVI	POINT OF VERTICAL INTERSECTION
PVT	POINT OF VERTICAL TANGENCY
PVMT	PAVEMENT
PWW	PAVED WATER WAY
R	RADIUS OF CURVATURE
R&D	REMOVE AND DISPOSE
RCP	REINFORCED CONCRETE PIPE
RD	ROAD
RDWY	ROADWAY
REM	REMOVE
RET	RETAIN
RET WALL	RETAINING WALL
ROW	RIGHT OF WAY
RR	RAILROAD
R&R	REMOVE AND RESET
R&S	REMOVE AND STACK
RT	RIGHT
SB	STONE BOUND
SHLD	SHOULDER
SMH	SEWER MANHOLE
ST	STREET
STA	STATION
SSD	STOPPING SIGHT DISTANCE
SHLO	STATE HIGHWAY LAYOUT LINE
SW	SIDEWALK
SWTU	STORMWATER TREATMENT UNIT
T	TANGENT DISTANCE OF CURVE/TRUCK %
TAN	TANGENT
TEMP	TEMPORARY
TC	TOP OF CURB
TOS	TOP OF SLOPE
TYP	TYPICAL
UP	UTILITY POLE
VAR	VARIES
VERT	VERTICAL
VC	VERTICAL CURVE
WCR	WHEEL CHAIR RAMP
WG	WATER GATE
WIP	WROUGHT IRON PIPE
WM	WATER METER/WATER MAIN
X-SECT	CROSS SECTION

SHARON

MASKWONICUT STREET OVER AMTRAK/MBTA

STATE	FED. AID PROJ. NO.	SHEET NO.	TOTAL SHEETS
MA	-	2	86
PROJECT FILE NO.	608079		

LEGEND, ABBREVIATIONS & GENERAL NOTES

GEN NOTES AND LEGEND.DWG Plotted on 19-Nov-2020 4:44 PM

SHARON
MASKWONICUT STREET OVER AMTRAK/MBTA

STATE	FED. AID PROJ. NO.	SHEET NO.	TOTAL SHEETS
MA	-	3	86
PROJECT FILE NO.	608079		

TYPICAL SECTIONS & PAVEMENT NOTES

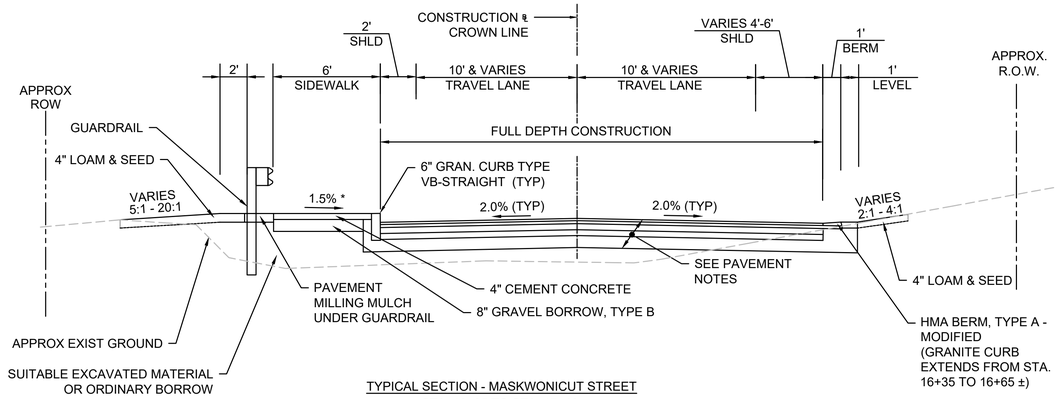

TYPICAL SECTION - MASKWONICUT STREET
STA. 16+35 TO STA. 17+10
SCALE: 1"=4'

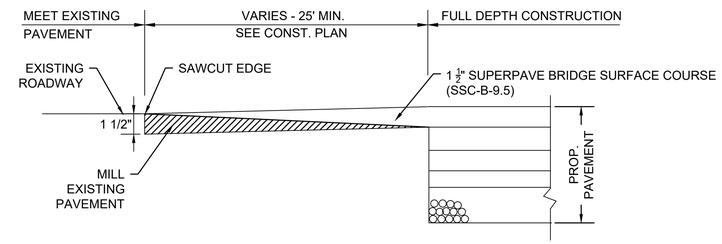

PAVEMENT TRANSITION
(LONGITUDINAL SECTION)

PAVEMENT NOTES

PROPOSED PAVEMENT MILLING AND OVERLAY:

1½" SUPERPAVE BRIDGE SURFACE COURSE - 9.5 (SSC-B-9.5) OVER
1½" PAVEMENT MILLING AND VARIABLE DEPTH OVERLAY

PROPOSED FULL DEPTH RECONSTRUCTION:

1½" SUPERPAVE BRIDGE SURFACE COURSE - 9.5 (SSC-B-9.5) OVER
ASPHALT EMULSION FOR TACK COAT OVERLAY
2" SUPERPAVE INTERMEDIATE COURSE - 12.5 (SIC-12.5) OVER
ASPHALT EMULSION FOR TACK COAT OVERLAY
4" SUPERPAVE BASE COURSE - 37.5 (SBC-37.5)
4" DENSE GRADED CRUSHED STONE
8" GRAVEL BORROW, TYPE B

HOT MIX ASPHALT DRIVEWAY:

1½" SUPERPAVE BRIDGE SURFACE COURSE - 9.5 (SSC-B-9.5) OVER
2½" SUPERPAVE INTERMEDIATE COURSE (SIC-12.5) OVER
8" GRAVEL BORROW, TYPE B

CEMENT CONCRETE WALK AND WHEELCHAIR RAMP:

4" CEMENT CONCRETE OVER
8" GRAVEL BORROW, TYPE B

TACK COAT SHALL BE APPLIED AT RATE OF 0.07 - 0.09 GALLON PER YARD OVER MILLED SURFACES AND 0.06 - 0.08 GALLON PER SQUARE YARD OVER SMOOTH PAVED SURFACES.

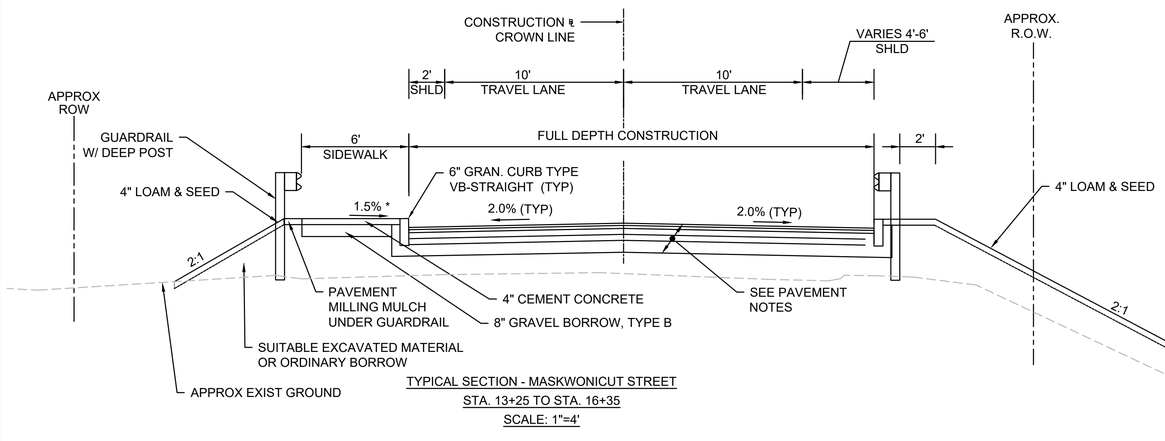

TYPICAL SECTION - MASKWONICUT STREET
STA. 13+25 TO STA. 16+35
SCALE: 1"=4'

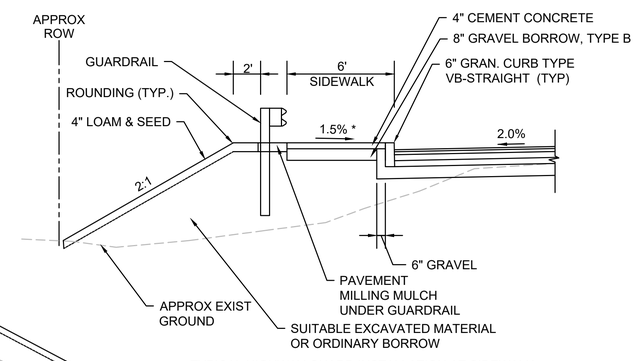

TYPICAL HIGHWAY GUARD INSTALLATION AT SIDEWALK
N.T.S.

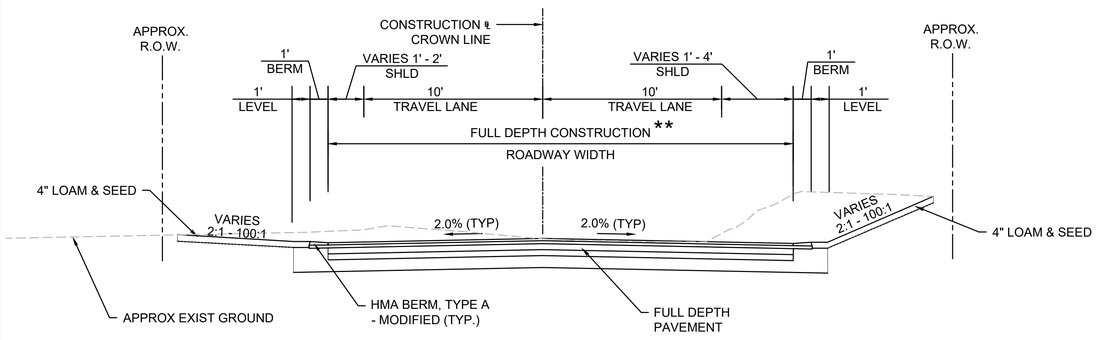

TYPICAL SECTION - MASKWONICUT STREET
STA. 11+55.56 TO STA. 13+25
STA. 17+10 TO STA. 18+24
SCALE: 1"=4'

** MILLING AND OVERLAY
STA. 11+55.56 TO 11+80.56
STA. 18+00 TO 18+24

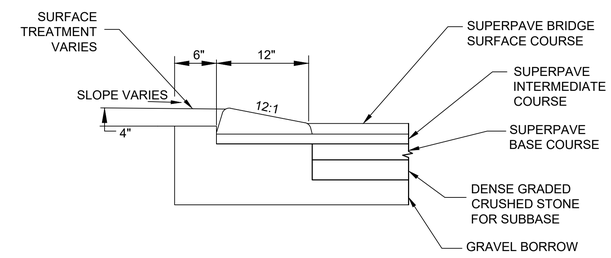

HMA BERM, MODIFIED
N.T.S.

* TOLERANCE FOR CONSTRUCTION ±0.5%

HIGHWAY GUARD DETAILS

STA 13+21 LT TO STA 13+31 LT (TRAILING ANCHORAGE)
STA 13+31 LT TO STA 14+12 LT (TL3 - DEEP POSTS)
STA 14+12 LT TO STA 14+46 LT (TRANSITION)
STA 13+23 RT TO STA 13+33 RT (TRAILING ANCHORAGE)
STA 13+33 RT TO STA 13+39 RT (TL3)
STA 13+39 RT TO STA 13+73 RT (TRANSITION)
STA 15+87 LT TO STA 16+23 LT (TRANSITION)
STA 16+23 LT TO STA 16+32 LT (TL3 - DEEP POSTS)
STA 16+32 LT TO STA 16+42 LT (TRAILING ANCHORAGE)
STA 15+84 RT TO STA 16+16 RT (TRANSITION)
STA 16+16 RT TO STA 16+24 RT (TL3)
STA 16+24 RT TO STA 16+33 RT (TRAILING ANCHORAGE)

TRAFFIC SIGNAL CONDUIT

NONE

WATER SUPPLY ALTERATIONS

SEE UTILITY PLAN

DRAINAGE DETAILS

SEE UTILITY PLAN

LANDSCAPE DETAILS

SEE LANDSCAPING PLAN

SHARON
MASKWONICUT STREET OVER AMTRAK/MBTA

STATE	FED. AID PROJ. NO.	SHEET NO.	TOTAL SHEETS
MA	-	4	86
PROJECT FILE NO.	608079		

CONSTRUCTION PLAN

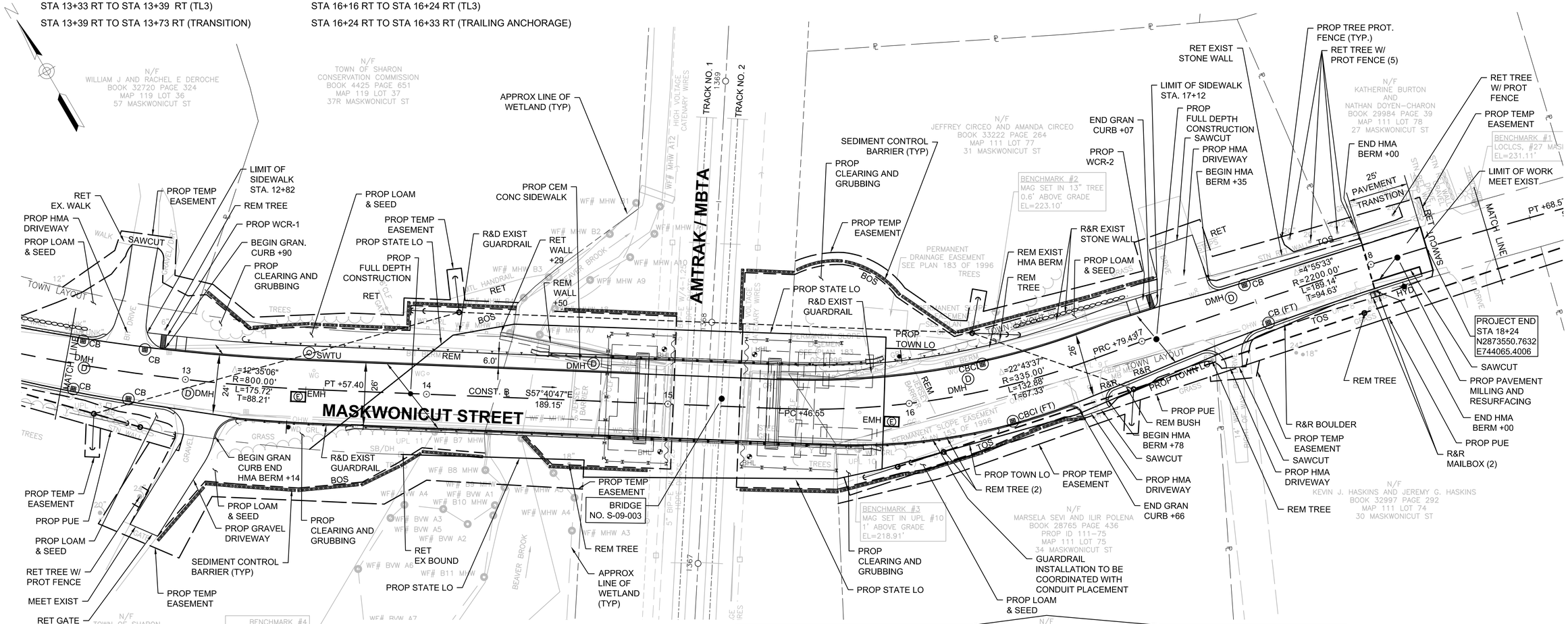

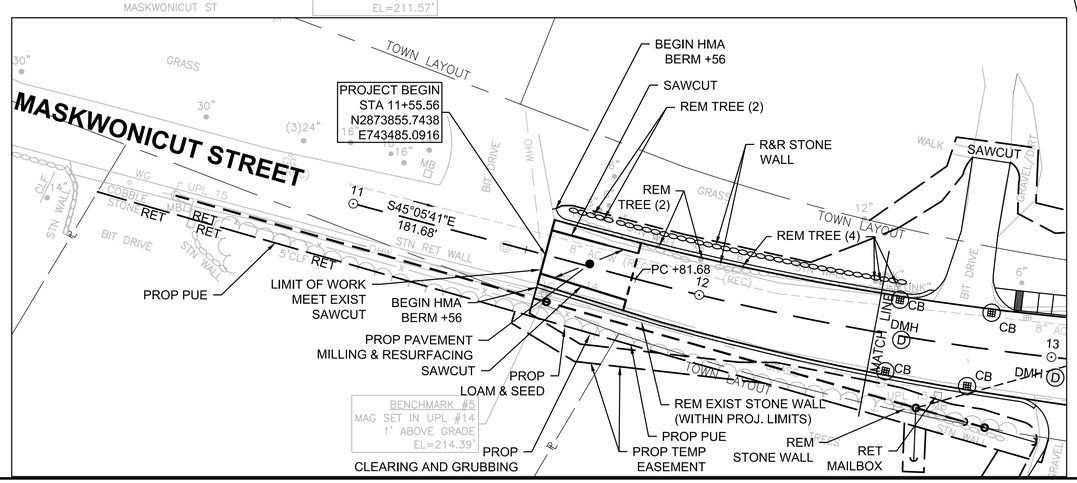

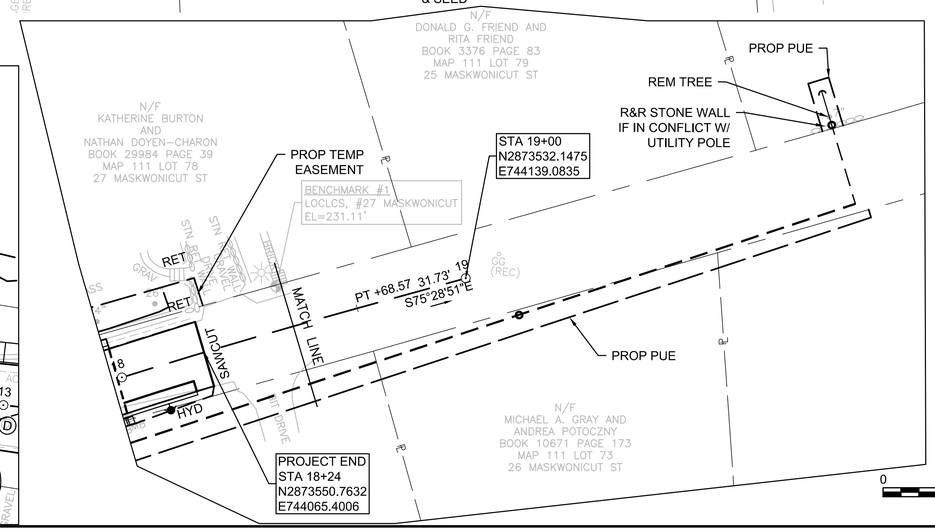

FOR PROFILE SEE SHEET 5

0 20 50 100
SCALE: 1" = 20'

CONSTRUCTION PLAN.DWG Plotted on 19-Nov-2020 4:46 PM

SHARON
MASKWONICUT STREET OVER AMTRAK/MBTA

STATE	FED. AID PROJ. NO.	SHEET NO.	TOTAL SHEETS
MA	-	5	86
PROJECT FILE NO.	608079		

PROFILE

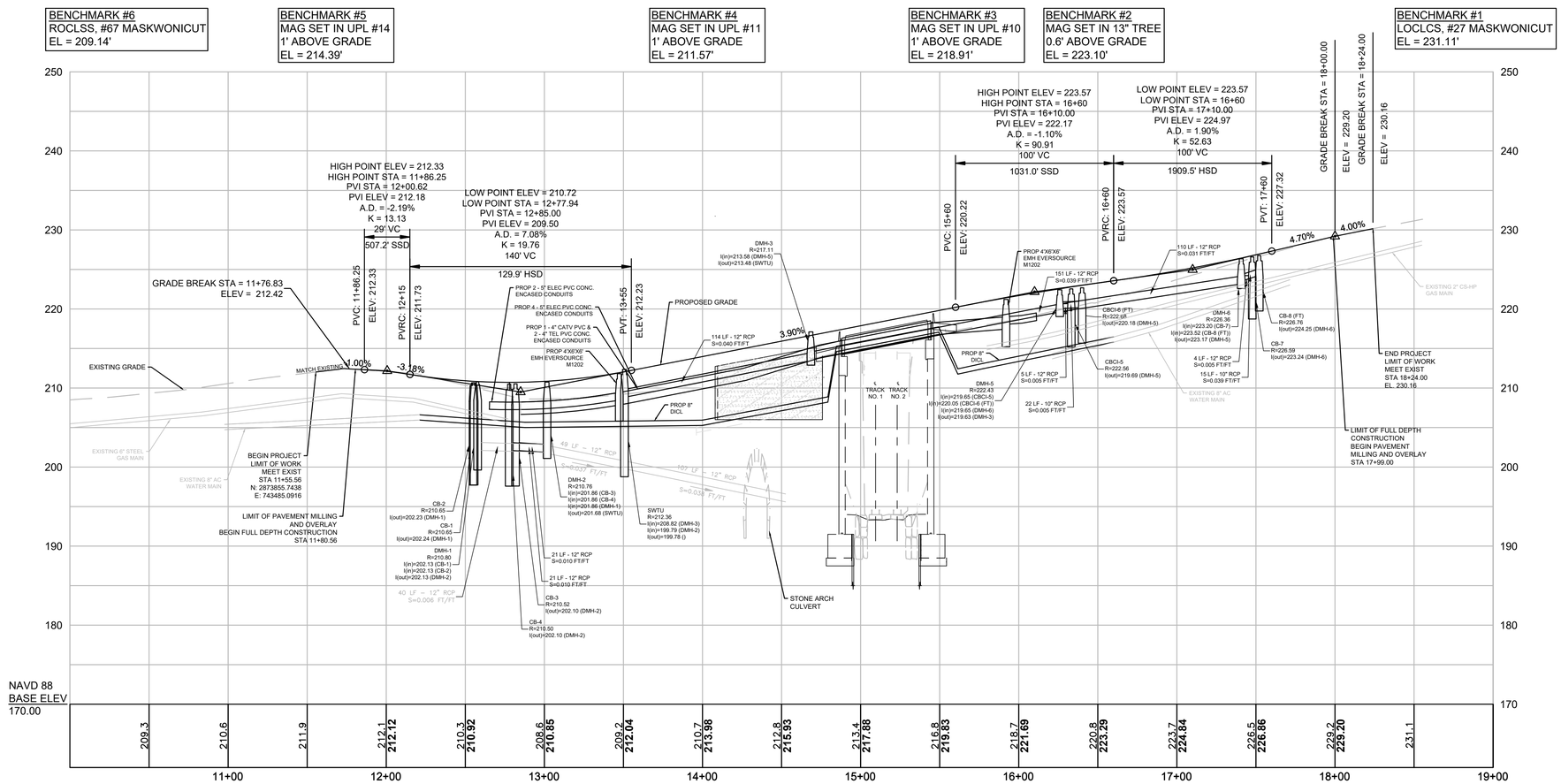

FOR CONSTRUCTION PLAN SEE SHEET 4

HOR. SCALE IN FEET
40 0 40 80
8 0 8 16
VER. SCALE IN FEET

PROFILE.DWG Plotted on 19-Nov-2020 4:47 PM

BASELINE DATA

SEE PLANS

LEGEND

(#) CURVE

CURVE DATA

CURVE	LENGTH	RADIUS	DELTA	TANGENT
1	175.72	800.00	12°35'06"	88.21
2	102.06	800.00	7°18'34"	51.10
3	128.12	323.00	22°43'37"	64.91
4	106.36	250.00	24°22'29"	53.99
5	121.56	1110.00	06°19'53"	60.84

SHARON
MASKWONICUT STREET OVER AMTRAK/MBTA

STATE	FED. AID PROJ. NO.	SHEET NO.	TOTAL SHEETS
MA	-	6	86
PROJECT FILE NO.	608079		

CURB TIE AND GRADING PLAN

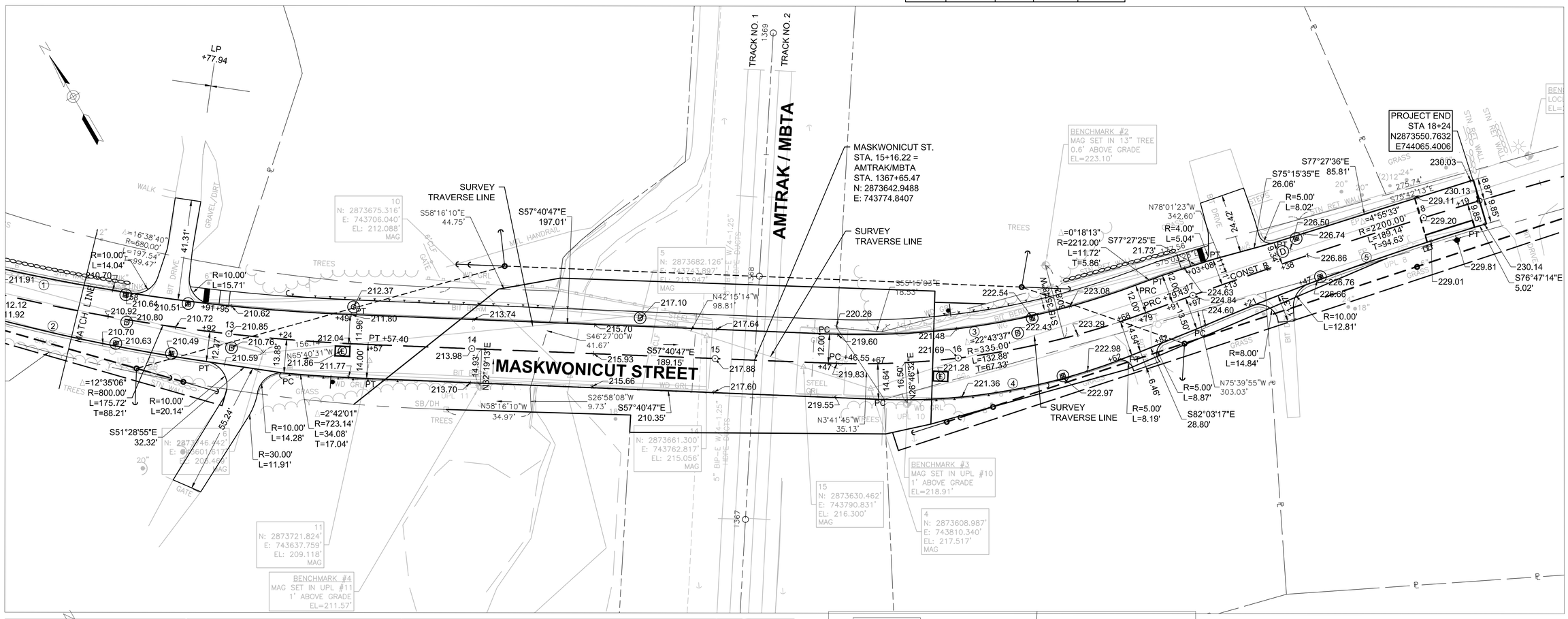

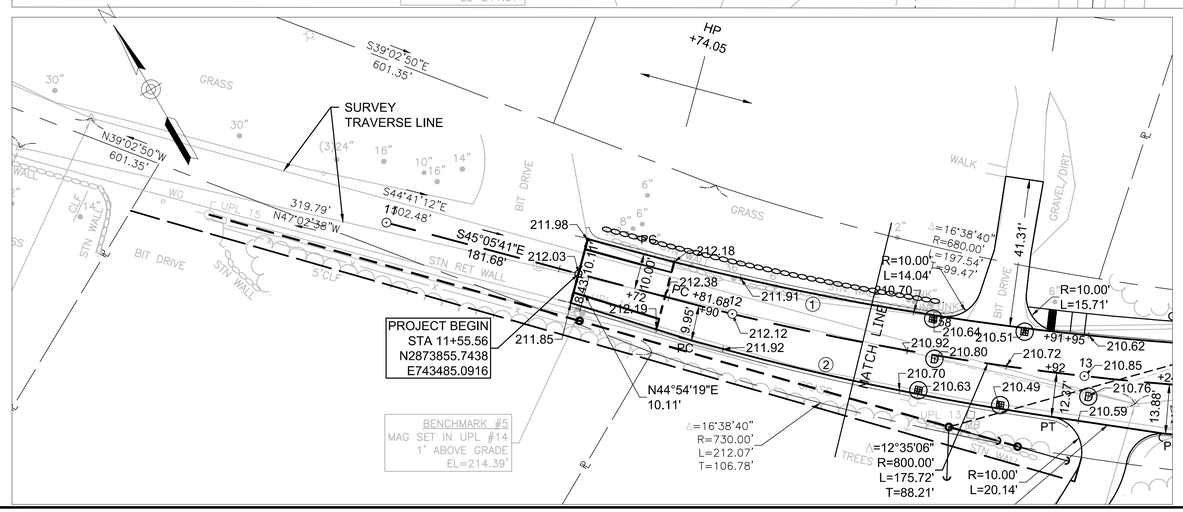

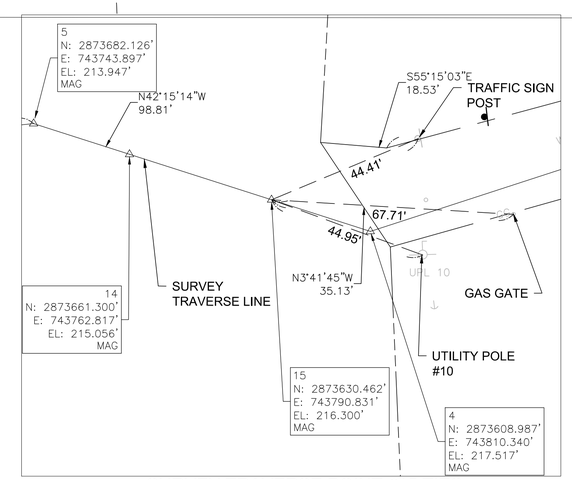

SURVEY TRAVERSE POINT #15 TIES

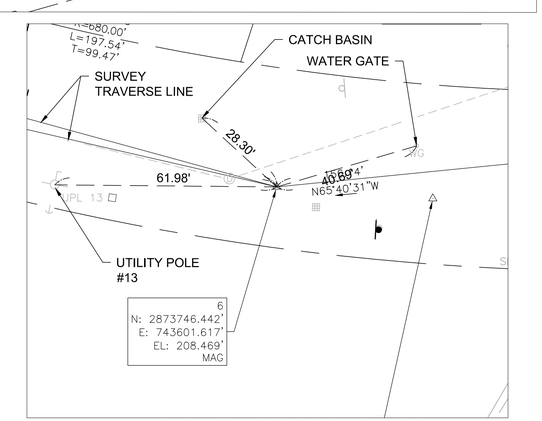

SURVEY TRAVERSE POINT #6 TIES

0 20 50 100

SCALE: 1" = 20'

CURB TIE AND GRADING.DWG Plotted on 19-Nov-2020 5:32 PM

SHARON
MASKWONICUT STREET OVER AMTRAK/MBTA

STATE	FED. AID PROJ. NO.	SHEET NO.	TOTAL SHEETS
MA	-	7	86
PROJECT FILE NO.	608079		

TRAFFIC SIGN AND PAVEMENT MARKING PLAN

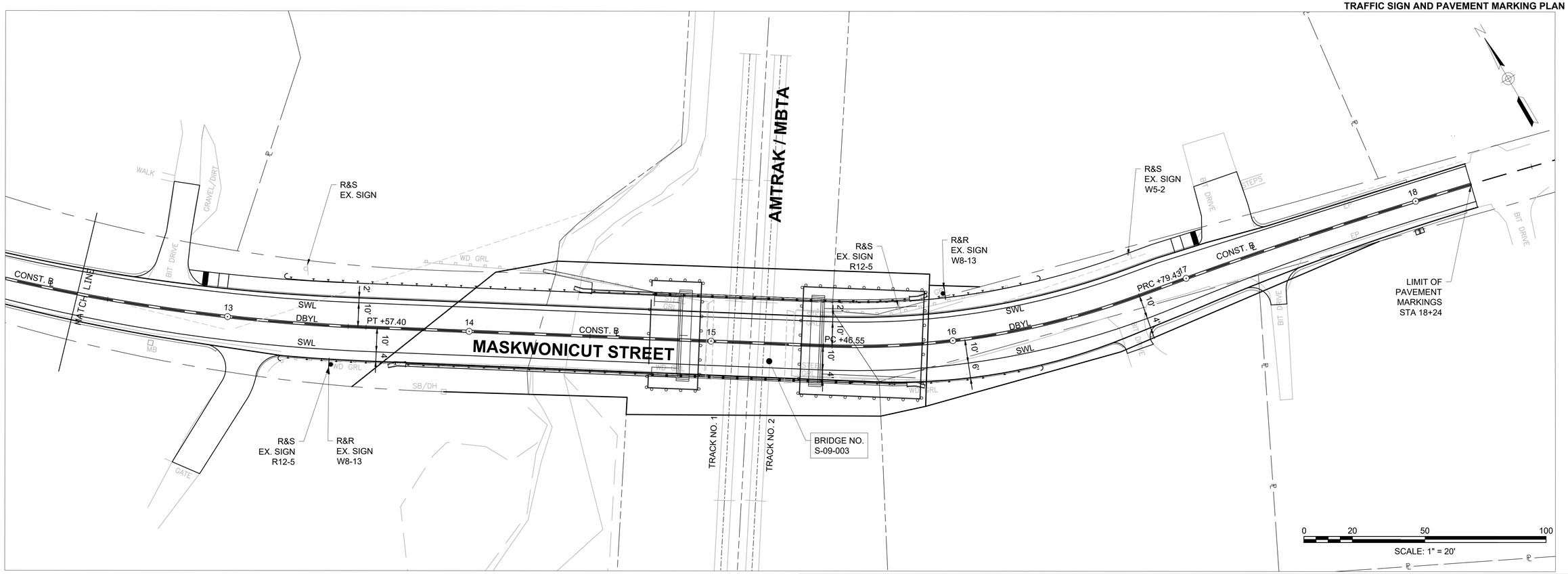

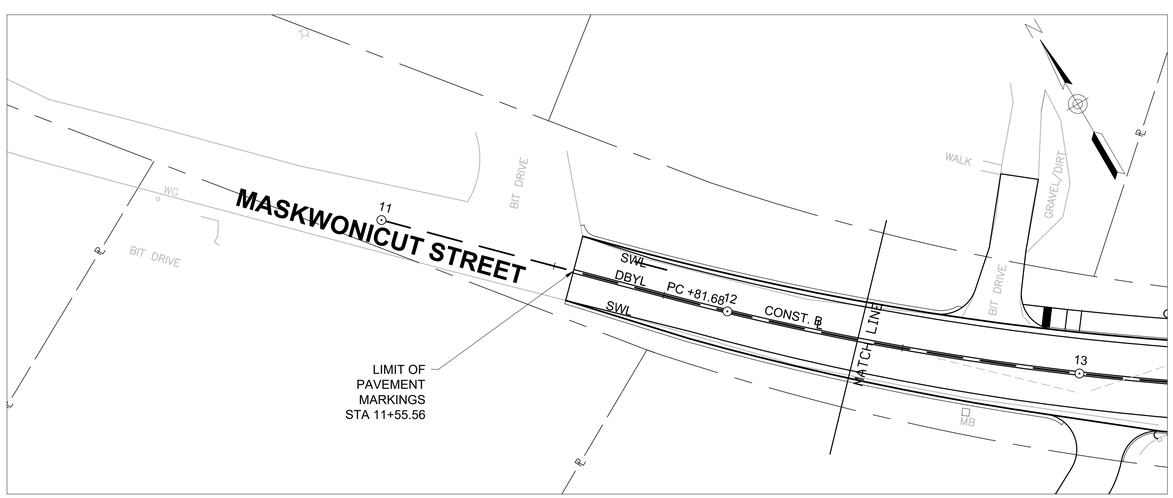

IDENTIFICATION NUMBER	SIZE OF SIGN WIDTH	SIZE OF SIGN HEIGHT	TEXT	TEXT DIMENSIONS (INCHES) LETTER HEIGHT	VERTICAL SPACING	ARROW RTE. MKR.	NUMBER OF SIGNS REQUIRED	COLOR BACK-GROUND	LEGEND	BORDER	POST SIZE AND NUMBER REQUIRED	UNIT AREA (S.F.)	AREA IN SQUARE FEET
R12-5	24"	36"	WEIGHT LIMIT OT OOT OOT	SEE MUTCD AND STANDARD HIGHWAY SIGNS MANUAL, LATEST EDITIONS			2 R&S	WHITE	BLACK	BLACK	N/A	EA	-
W8-13	36"	36"	BRIDGE DECK FREEZES BEFORE PAVEMENT				2 R&R	YELLOW	BLACK	BLACK	N/A	EA	-
-	36"	36"	SLOW NARROW ROAD				1 R&S	YELLOW	BLACK	BLACK	N/A	EA	-
W5-2	36"	36"	NARROW BRIDGE				1 R&S	YELLOW	BLACK	BLACK	N/A	EA	-

SIGNS & PAV MARKING.DWG Plotted on 19-Nov-2020 4:48 PM

SHARON
MASKWONICUT STREET OVER AMTRAK/MBTA

STATE	FED. AID PROJ. NO.	SHEET NO.	TOTAL SHEETS
MA	-	8	86
PROJECT FILE NO.	608079		

TEMPORARY TRAFFIC CONTROL PLAN
DETOUR

TRAFFIC DETOUR PLAN

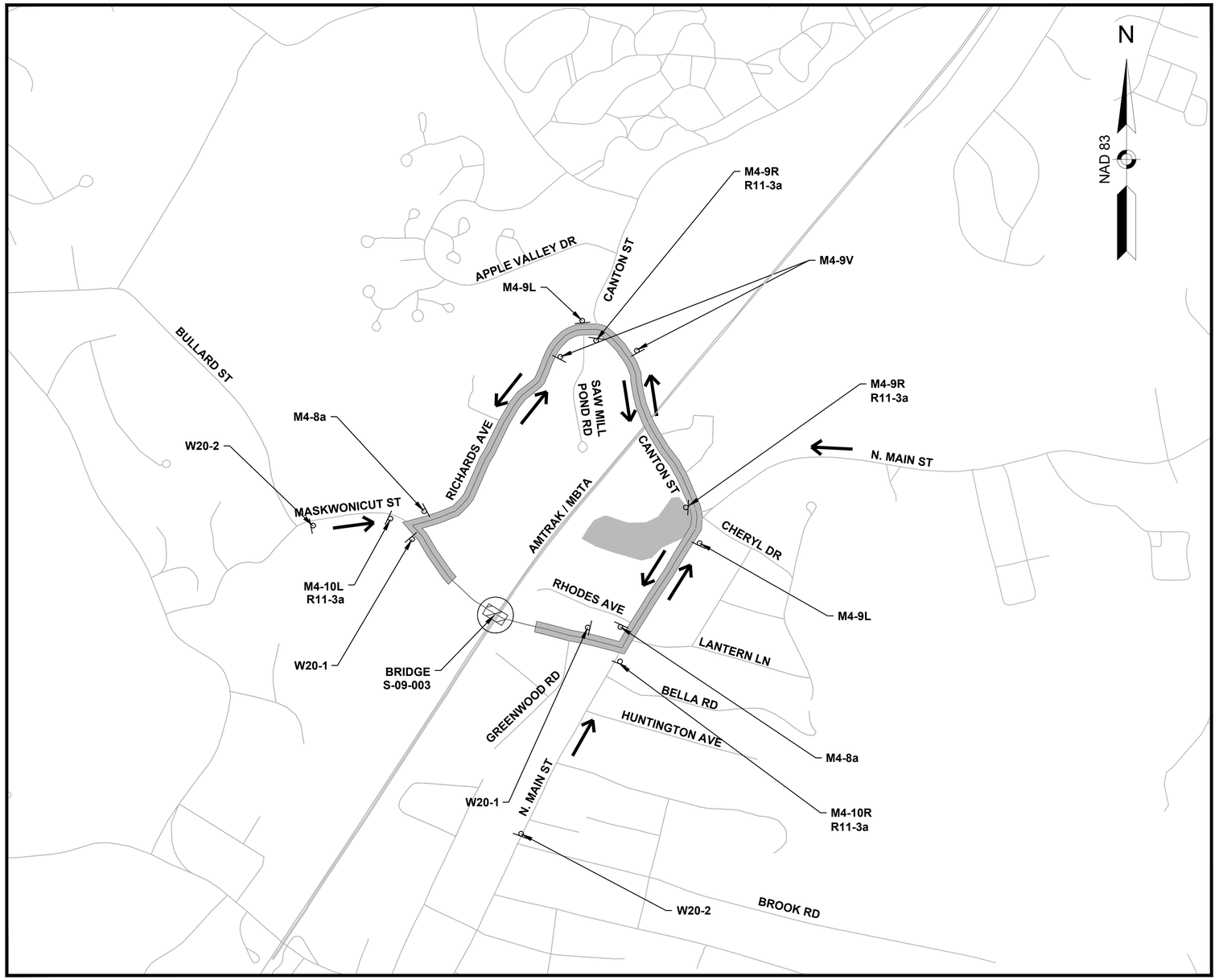

0 500 1000 1500 2000
SCALE: 1" = 500'

LEGEND:

- WORK ZONE
- DETOUR ROUTE
- SIGN

IDENTIFICATION NUMBER	SIZE OF SIGN		TEXT	NUMBER OF SIGNS REQUIRED	COLOR			TOTAL AREA (SF)
	WIDTH	HEIGHT			BACK-GROUND	LEGEND	BORDER	
M4-8a	24"	18"	END DETOUR	2	FLUOR-ESCENT ORANGE	BLACK	BLACK	6
M4-9L	48"	30"	DETOUR ←	2	FLUOR-ESCENT ORANGE	BLACK	BLACK	20
M4-9R	48"	30"	DETOUR →	2	FLUOR-ESCENT ORANGE	BLACK	BLACK	20
M4-9V	48"	30"	DETOUR ↑	2	FLUOR-ESCENT ORANGE	BLACK	BLACK	20
M4-10R	48"	18"	DETOUR →	1	FLUOR-ESCENT ORANGE / BLACK	BLACK	BLACK	6
M4-10L	48"	18"	← DETOUR	1	FLUOR-ESCENT ORANGE / BLACK	BLACK	BLACK	6
W20-1	48"	48"	ROAD WORK AHEAD	2	FLUOR-ESCENT ORANGE	BLACK	BLACK	32
W20-2	36"	36"	DETOUR AHEAD	2	FLUOR-ESCENT ORANGE	BLACK	BLACK	18
R11-3a	60"	30"	MASKWONICUT STREET BRIDGE CLOSED LOCAL TRAFFIC ONLY	4	WHITE	BLACK	BLACK	50

TTCP 01-DETOUR.DWG Plotted on 19-Nov-2020 4:49 PM

SHARON
MASKWONICUT STREET OVER AMTRAK/MBTA

STATE	FED. AID PROJ. NO.	SHEET NO.	TOTAL SHEETS
MA	-	9	86
PROJECT FILE NO.	608079		

TEMPORARY TRAFFIC CONTROL PLAN
BRIDGE CLOSURE

TTCP 02-BRIDGE CLOSURE.DWG Plotted on 19-Nov-2020 4:50 PM

NOTES:

1. ALL TEMPORARY TRAFFIC CONTROL WORK SHALL CONFORM TO THE LATEST EDITION OF THE "MANUAL ON UNIFORM TRAFFIC CONTROL DEVICES" (MUTCD) AND ALL REVISIONS, UNLESS SUPERCEDED BY THESE PLANS.
2. ALL SIGN LEGENDS, BORDERS, AND MOUNTING SHALL BE IN ACCORDANCE WITH THE MUTCD.
3. TEMPORARY CONSTRUCTION SIGNING AND ALL OTHER TRAFFIC CONTROL DEVICES SHALL BE IN PLACE PRIOR TO THE START OF ANY WORK.
4. TEMPORARY CONSTRUCTION SIGNING, BARRICADES, AND ALL OTHER NECESSARY WORK ZONE TRAFFIC CONTROL DEVICES SHALL BE REMOVED FROM THE HIGHWAY OR COVERED WHEN THEY ARE NOT REQUIRED FOR CONTROL OF TRAFFIC.
5. SIGNS AND SIGN SUPPORTS LOCATED ON OR NEAR THE TRAVELED WAY, CHANNELIZING DEVICES, BARRIERS, AND CRASH ATTENUATORS MUST PASS THE CRITERIA SET FORTH IN NCHRP REPORT 350, "RECOMMENDED PROCEDURES FOR THE SAFETY PERFORMANCE EVALUATION OF HIGHWAY FEATURES" AND/OR "MANUAL FOR ASSESSING SAFETY HARDWARE" (MASH).
6. CONTRACTORS SHALL NOTIFY EACH ABUTTER AT LEAST 24 HOURS IN ADVANCE OF THE START OF ANY WORK THAT WILL REQUIRE THE TEMPORARY CLOSURE OF ACCESS, SUCH AS CONDUIT INSTALLATION, EXISTING PAVEMENT EXCAVATION, TEMPORARY DRIVEWAY PAVEMENT PLACEMENT, AND SIMILAR OPERATIONS.
7. THE FIRST TEN PLASTIC DRUMS OF ANY TAPER SHALL BE EQUIPPED WITH SEQUENTIAL FLASHING LIGHTS.
8. THE ADVISORY SPEED LIMIT, IF REQUIRED, SHALL BE DETERMINED BY THE ENGINEER.
9. DISTANCES ARE A GUIDE AND MAY BE ADJUSTED IN THE FIELD BY THE ENGINEER.
10. MAXIMUM SPACING OF TRAFFIC DEVICES IN A TAPER (DRUMS OR CONES) IS EQUAL IN FEET TO THE SPEED LIMIT IN MPH.
11. MINIMUM LANE WIDTH IS TO BE 11 FEET (3.3m) UNLESS OTHERWISE SHOWN. MINIMUM LANE WIDTH TO BE MEASURED FROM THE EDGE OF DRUMS OR MEDIAN BARRIER.
12. PEDESTRIANS SHALL NOT BE PROVIDED WITH ACCESS FOR THE DURATION OF CONSTRUCTION.
13. NO DIFFERENCE IN ROADWAY LANE ELEVATION WILL BE ALLOWED AT THE END OF THE WORK DAY.
14. DASHED LINES SHOW LANE DESIGNATIONS TO BE USED DURING CONSTRUCTION.
15. THE CONTRACTOR SHALL SUBMIT ANY REVISIONS TO THE CONSTRUCTION ZONE SAFETY PLAN TO THE ENGINEER APPROVAL.
16. THIS CONSTRUCTION ZONE SAFETY PLAN SHALL NOT RELIEVE THE CONTRACTOR OF HIS SOLE RESPONSIBILITY FOR CONSTRUCTION SITE SAFETY.

LEGEND:

- REFLECTORIZED PLASTIC DRUM OR 36" CONE
- P/F POLICE/FLAGGER DETAIL
- TYPE III BARRICADE
- CHANGEABLE MESSAGE SIGN
- ARROW BOARD
- WORK ZONE
- DIRECTION OF TRAFFIC
- IMPACT ATTENUATOR
- MEDIAN BARRIER
- MEDIAN BARRIER WITH WARNING LIGHTS
- WORK VEHICLE
- TRUCK MOUNTED ATTENUATOR
- TRAFFIC OR PEDESTRIAN SIGNAL
- SIGN

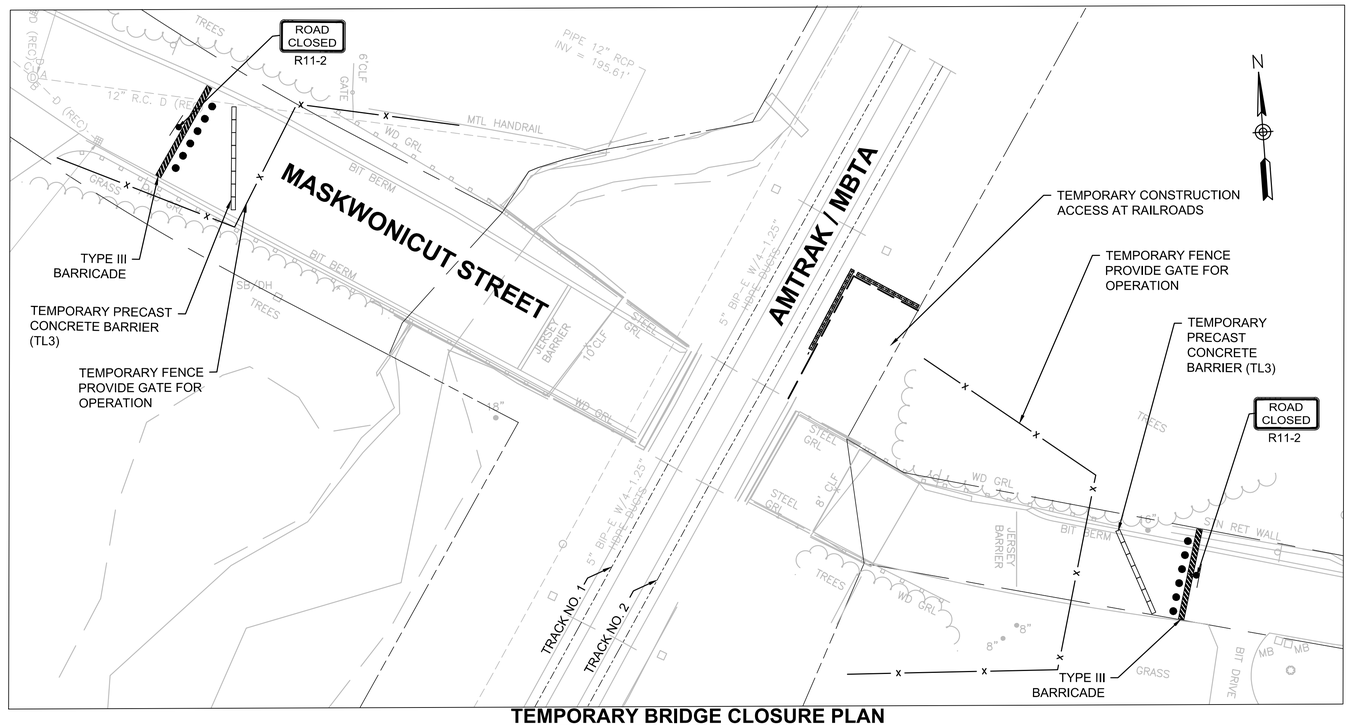

TEMPORARY BRIDGE CLOSURE PLAN
SCALE: 1" = 20'

TEMPORARY TRAFFIC SIGN SUMMARY

MUTCD CODE	SIZE OF SIGN		SIGN	QTY	COLOR			TOTAL AREA (SF)
	WIDTH	HEIGHT			BACK-GROUND	LEGEND	BORDER	
W20-4	48"	48"	ONE LANE ROAD 1000 FT.	2	FLUOR-ESCENT ORANGE	BLACK	BLACK	32
W13-1p	18"	18"	20 M.P.H.	2	FLUOR-ESCENT ORANGE	BLACK	BLACK	4.5
MA-W20-7b	48"	48"	POLICE OFFICER AHEAD	0	FLUOR-ESCENT ORANGE	BLACK	BLACK	0
W20-7	48"	48"		2	FLUOR-ESCENT ORANGE	BLACK	BLACK	32
R11-2	48"	30"	ROAD CLOSED	2	WHITE	BLACK	BLACK	32
W8-3	48"	48"	PAVEMENT ENDS	2	FLUOR-ESCENT ORANGE	BLACK	BLACK	32
W8-8	48"	48"	ROUGH ROAD	2	FLUOR-ESCENT ORANGE	BLACK	BLACK	32
W8-1	48"	48"	BUMP	2	FLUOR-ESCENT ORANGE	BLACK	BLACK	32

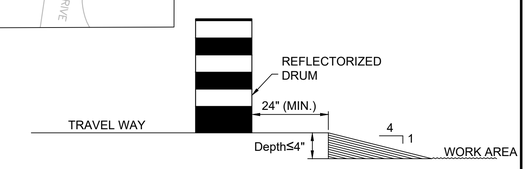

LATERAL DROP-OFF DETAIL
NOT TO SCALE

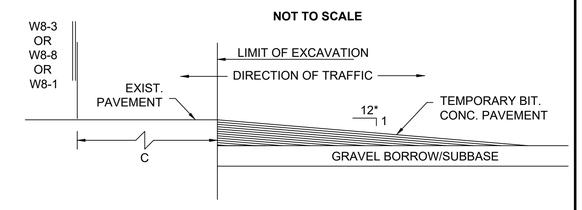

LONGITUDINAL DROP-OFF DETAIL
NOT TO SCALE

* - INCREASE SLOPE RATIO FOR HIGHER SPEEDS

LATERAL AND LONGITUDINAL DROP-OFF DETAILS
NOT TO SCALE

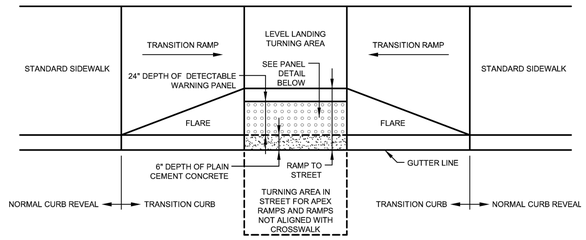

TYPICAL INSTALLATION

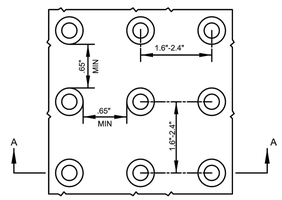

DETAIL OF DETECTABLE WARNING PANEL

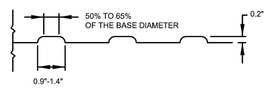

SECTION A-A

NOTE:

PANELS MAY BE CONCRETE PRECAST OR CAST IN PLACE OR OTHER SUITABLE MATERIAL PERMANENTLY APPLIED TO THE RAMP. DETECTABLE WARNING SURFACES SHALL CONTRAST VISUALLY WITH ADJACENT WALKING SURFACES EITHER LIGHT-ON-DARK, OR DARK-ON-LIGHT.

E 107.6.5
DETECTABLE WARNING PANEL FOR WHEELCHAIR RAMPS
AND STANDARD RAMP TERMINOLOGY
N.T.S.

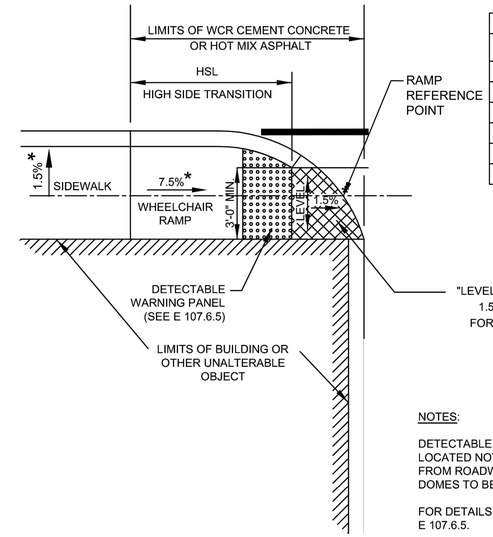

WHEELCHAIR RAMP HIGH SIDE TRANSITIONS	
ROADWAY PROFILE GRADE %	TRANSITION LENGTH **
0%	6'-6"
>0% TO 1%	7'-8"
>1% TO 2%	9'-0"
>2% TO 3%	11'-0"
>3% TO 4%	14'-0"
>4% TO 5%	15'-0" Max

NOTE:

** BASED ON A DESIGN SLOPE OF 7.5% AND A REVEAL OF 6".

NOTES:

DETECTABLE WARNING PANEL LOCATED NOT LESS THAN 6" OR MORE THAN 24" FROM ROADWAY EDGE (GUTTER LINE). TRUNCATED DOMES TO BE ALIGNED WITH DIRECTION OF TRAVEL.

FOR DETAILS OF TRUNCATED DOMES SEE DRAWING E 107.6.5.

ROADWAY, GUTTER, AND FIRST 6" OF SIDEWALK TO BE ADJUSTED FOR FIELD CONDITIONS.

LEGEND

HSL = HIGH SIDE TRANSITION LENGTH (SEE E 107.9.0)

* = TOLERANCE FOR CONSTRUCTION ±0.5%

CEMENT CONCRETE WHEELCHAIR RAMP TYPE "A"
N.T.S.

SHARON
MASKWONICUT STREET OVER AMTRAK/MBTA

STATE	FED. AID PROJ. NO.	SHEET NO.	TOTAL SHEETS
MA	-	10	86
PROJECT FILE NO.	608079		

CONSTRUCTION DETAILS

WHEELCHAIR RAMP NOTES:

1. CONTRACTOR IS RESPONSIBLE FOR CONSTRUCTION OF RAMP WITHIN TOLERANCES GIVEN UNLESS OTHERWISE NOTED. FAILURE TO MEET TOLERANCES, OR PRIOR NOTICE TO ENGINEER THAT TOLERANCES CANNOT BE MET, WILL REQUIRE RECONSTRUCTION TO PROPER TOLERANCES AT NO ADDITIONAL EXPENSE TO THE OWNER.
2. INSTALL DETECTABLE WARNING PANEL ACCORDING TO MASSDOT CONST. STANDARDS DETAILS DWG NO. E 107.6.5

* TOLERANCE FOR CONSTRUCTION ±0.5%

RAMP NO.	RAMP TYPE	RAMP REFERENCE POINT BASELINE		LENGTH OF PRIMARY RAMP	WIDTH OF SIDEWALK	WIDTH OF RAMP	DEPTH OF LEVEL LANDING	TRANSITION LENGTH		GUTTER SLOPE
		STATION	OFFSET					LEFT	RIGHT	
MASKWONICUT STREET										
1	A	12+83.81'	14.3' LT	N/A	6.0	6.0	N/A	N/A	6.5	0.60%
2	A	17+11.90'	14.1' LT	N/A	6.0	6.0	N/A	6.5	N/A	3.7%

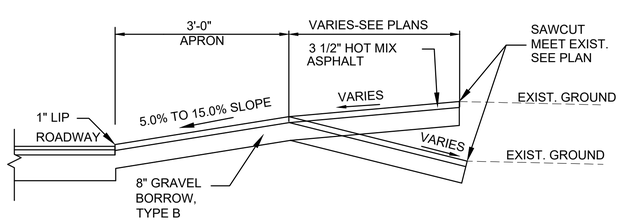

HOT MIX ASPHALT DRIVEWAY APRON
NOT TO SCALE

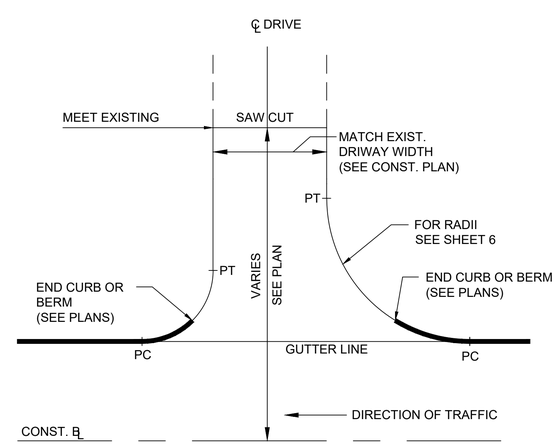

TYPICAL HMA OR GRAVEL DRIVE ENTRANCE
NOT TO SCALE

CONSTRUCTION DETAILS.DWG Plotted on 19-Nov-2020 4:50 PM

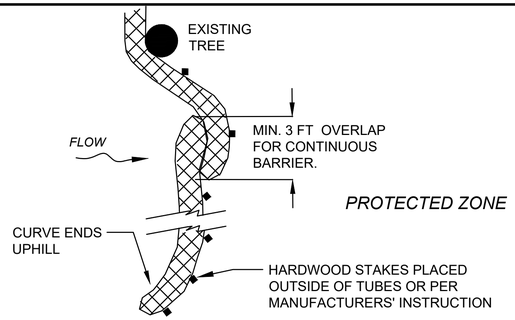

PLACE TUBE AS CLOSE TO LIMIT OF SOIL DISTURBANCE AS POSSIBLE, ALONG CONTOURS, AND PERPENDICULAR TO FLOW.

ADJUST LOCATION AS REQUIRED FOR OPTIMUM EFFECTIVENESS. DO NOT INSTALL IN WATERWAYS.

PLAN VIEW

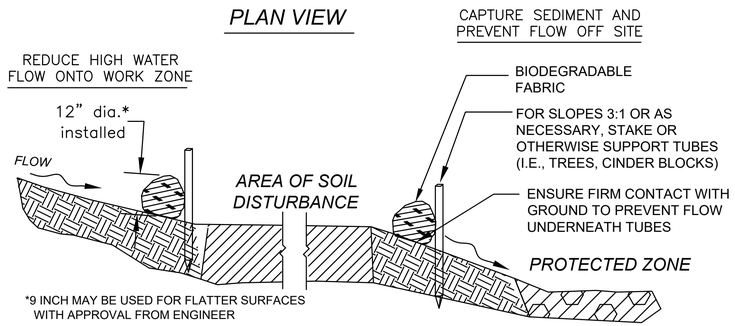

*9 INCH MAY BE USED FOR FLATTER SURFACES WITH APPROVAL FROM ENGINEER

SECTION

SEDIMENT BARRIER - COMPOST FILTER TUBE

NOT TO SCALE

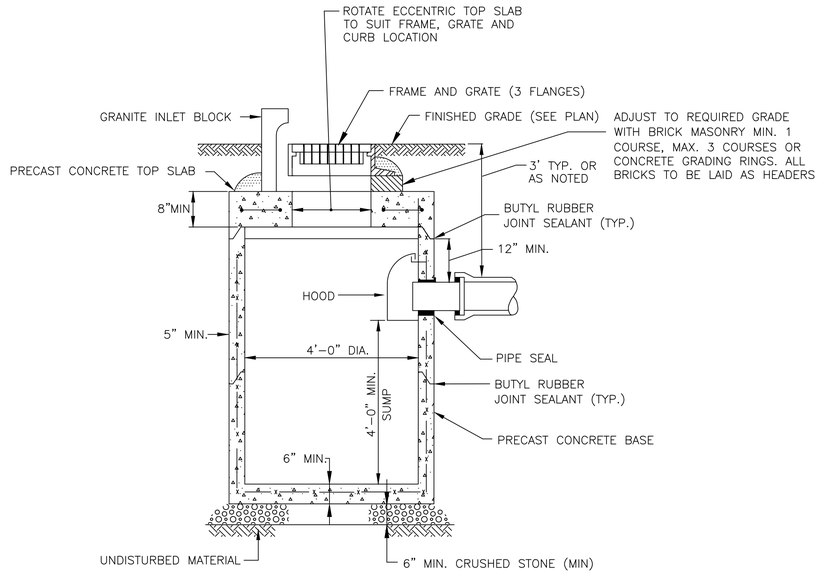

NOTE:
1. STRUCTURE SHALL MEET AASHTO HS20 AND CASTINGS SHALL MEET HS20 (AASHTO M 306) LOAD RATING.
2. REFER TO UTILITY PLAN FOR REQUIREMENTS ON DRAIN LATERAL PIPE MATERIAL.

SPECIAL CATCH BASIN (FLAT TOP) DETAIL

N.T.S.

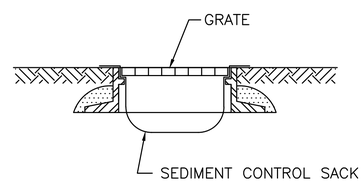

CATCH BASIN PROTECTION DETAIL

N.T.S.

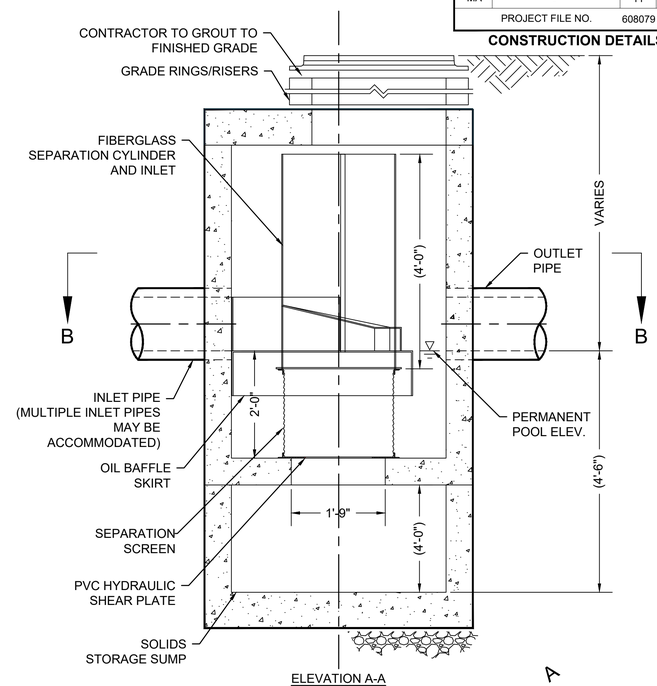

ELEVATION A-A

N.T.S

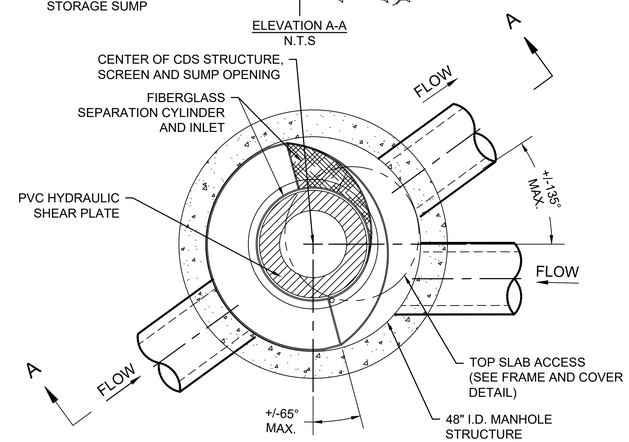

PLAN VIEW B-B

N.T.S

NOTES:

1. DIMENSIONS MARKED WITH ( ) ARE REFERENCE DIMENSIONS. ACTUAL DIMENSIONS MAY VARY.
2. FOR FABRICATION DRAWINGS WITH DETAILED STRUCTURE DIMENSIONS AND WEIGHTS, PLEASE CONTACT YOUR CONSTRUCTION PRODUCTS REPRESENTATIVE.
3. STORMWATER TREATMENT UNIT SHALL BE IN ACCORDANCE WITH ALL DESIGN DATA AND INFORMATION CONTAINED IN THIS DRAWING.
4. STRUCTURE SHALL MEET AASHTO HS20 AND CASTINGS SHALL MEET HS20 (AASHTO M 306) LOAD RATING.
5. PVC HYDRAULIC SHEAR PLATE IS PLACED ON SHELF AT BOTTOM OF SCREEN CYLINDER. REMOVE AND REPLACE AS NECESSARY DURING MAINTENANCE CLEANING.
6. MANHOLE MANUFACTURED TO ASTM C478 SPECIFICATION.

STORMWATER TREATMENT UNIT- INLINE

N.T.S.

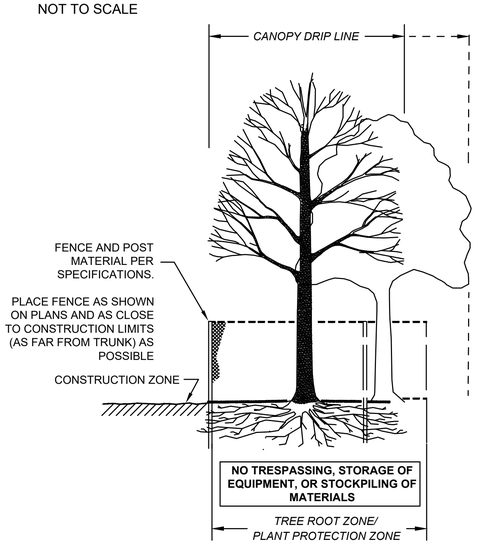

SECTION - FENCE PROTECTION OF ROOT ZONE

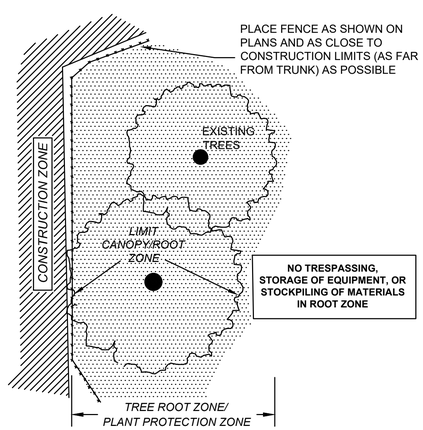

PLAN VIEW - FENCE PROTECTION OF ROOT ZONE

TREE PROTECTION - ROOT ZONE

NOT TO SCALE

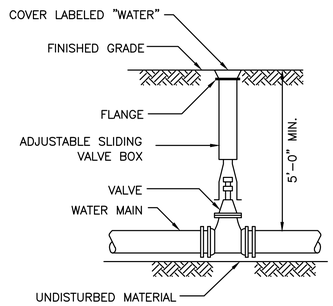

VALVE AND BOX DETAIL
N.T.S.

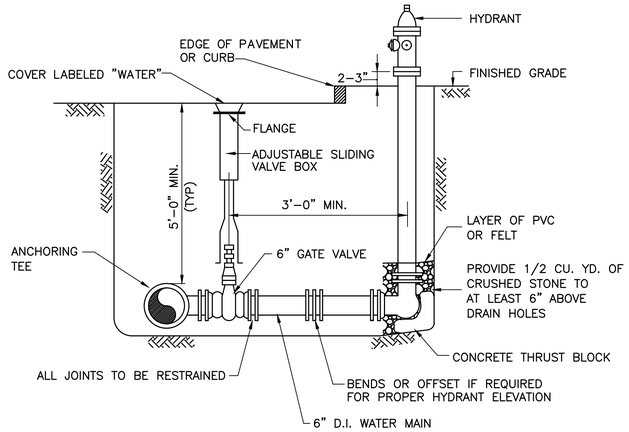

HYDRANT AND VALVE DETAIL
N.T.S.

TABLE 1 - DUCTILE IRON PIPE

REQUIRED LENGTH OF RESTRAINED JOINTS FROM FITTINGS (FEET)

PIPE SIZE	90° BEND	45° BEND OR WYE BRANCH	22 1/2° BEND	11 1/4° BEND	PLUG, CAP OR IN-LINE VALVE	TEE (BRANCH)
6"	25 (30.5)	10.5 (12.5)	5 (6)	2.5 (3)	43 (64)	34 (51)
8"	33 (40)	13.5 (16.5)	6.5 (8)	3 (4)	55 (82)	47 (70)
10"	40 (48.5)	16.5 (20)	8 (9.5)	4 (5)	67 (100)	58 (87)
12"	47 (56.5)	19.5 (23.5)	9.5 (11.5)	4.5 (5.5)	79 (118)	70 (105)
16"	59.5 (72)	24.5 (30)	12 (14.5)	6 (7)	101 (152)	92 (139)
20"	72 (86.5)	30 (36)	14.5 (17)	7 (8.5)	123 (184)	114 (171)
24"	84 (100)	35 (41)	16.5 (20)	8 (10)	144 (216)	134 (202)
30"	100 (120)	41 (50)	20 (24)	10 (12)	174 (261)	165 (247)

NOTES:

1. RESTRAINED LENGTHS LISTED IN PARENTHESES ARE FOR PIPE WRAPPED IN POLYETHYLENE. THE OTHER ASSOCIATED LENGTHS ARE FOR PLAIN UNWRAPPED DUCTILE IRON PIPE.
2. THE CONTRACTOR SHALL USE THIS TABLE IN CONJUNCTION WITH THE APPROPIATE PIPE SPECIFICATION SECTION.

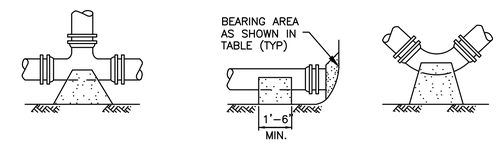

TEE DETAIL
(PLAN VIEW)

CAP DETAIL
(PLUG SIMILAR)
(SECTION VIEW)

BEND DETAIL
(PLAN VIEW)

TABLE OF CONCRETE THRUST RESTRAINT MINIMUM BEARING AREAS IN SQUARE FEET AGAINST UNDISTURBED MATERIAL FOR WATER MAIN FITTINGS				
SIZE OF MAIN	90° BENDS, TEES, CAPS AND PLUGS	45° BENDS AND WYES	22-1/2° BENDS	11-1/4° BENDS
6", 8"	5	4	2	2
10", 12"	12	9	5	2

NOTES:
1. CONCRETE THRUST RESTRAINT SHALL ONLY BE USED WHERE OTHER MEANS OF RESTRAINT ARE NOT FEASIBLE.
2. CONTRACTOR SHALL USE CARE TO AVOID PLACEMENT OF CONCRETE ON THE FITTING JOINTS

CONCRETE THRUST RESTRAINT FOR FITTINGS
N.T.S.

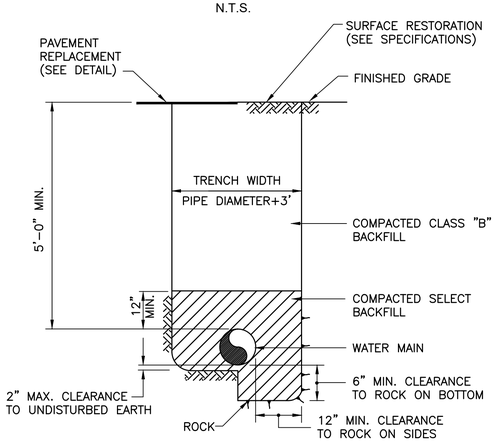

WATER MAIN TRENCH DETAIL
N.T.S.

UTILITY TRENCH NOTES:

1. ALL CONSTRUCTION OF DUCT BANKS INCLUDING TRENCH, EXCAVATION, AND BACKFILL SHALL CONFORM TO UTILITY DETAILS AND SPECIFICATIONS.
2. FOR ALL DUCTS USE SCHEDULE 40 CONDUITS ENCASED IN 2,500 PSI, 3/8 INCH, 520 CEMENT CONCRETE. USE PLASTIC SPACERS TO MAINTAIN CONDUIT SPACING. SPACERS SHALL MEET UTILITY SPECIFICATIONS FOR DESIGN AND SPACING.
3. ALL TRENCH EXCAVATION ACTIVITIES SHALL COMPLY WITH ALL APPROPRIATE OSHA STANDARDS.
4. EACH DUCT BANK SHALL HAVE ASSOCIATED WARNING TAPE INSTALLED. ELECTRIC DUCT BANKS WILL HAVE 6 INCH, COLOR RED, DETECTABLE METALLIC WARNING TAPE PLACED 6 INCHES ABOVE CONCRETE ENCASEMENT. TELEPHONE AND CATV DUCT BANKS WILL HAVE 6 INCH, COLOR ORANGE, DETECTABLE METALLIC WARNING TAPE PLACED 12 INCHES ABOVE EACH CONCRETE ENCASEMENT.
5. A UTILITY COMPANY REPRESENTATIVE FROM EVERSOURCE SHALL BE PRESENT FOR ALL ELECTRICAL CONDUIT INSTALLED.
6. A UTILITY COMPANY REPRESENTATIVE FROM VERIZON SHALL BE PRESENT FOR ALL TELEPHONE CONDUIT INSTALLED.
7. A UTILITY COMPANY REPRESENTATIVE FROM COMCAST SHALL BE PRESENT FOR ALL CATV CONDUIT INSTALLED.
8. A MINIMUM OF 12 INCHES OF SEPARATION IS REQUIRED FOR CROSSINGS WITH GAS, WATER, SEWER AND DRAINAGE.
9. CONDUITS SHALL BE BLOWN CLEAN USING COMPRESSED AIR. RUN MANDREL THRU EACH CONDUIT TO CONFIRM VIABLE PATHWAY.
10. WOVEN POLYESTER MULE TAPE WITH MINIMUM STRENGTH OF 2500 LB TENSILE STRENGTH TO BE INSTALLED WITHIN EACH CONDUIT.

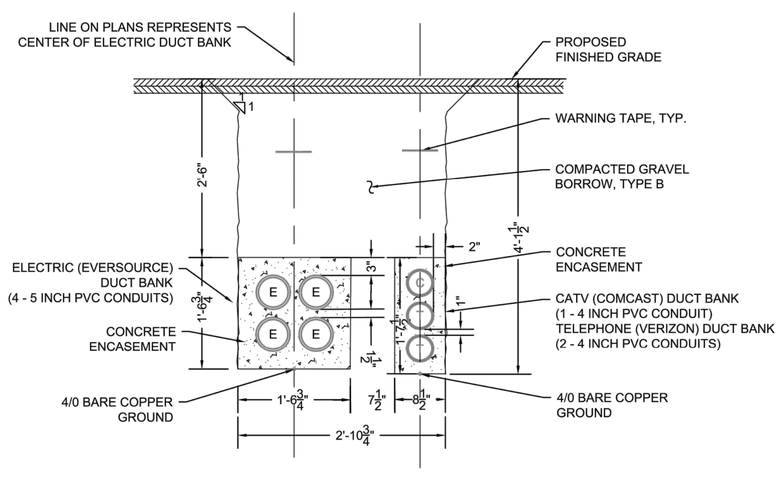

ELECTRIC / TELEPHONE / CATV TRENCH

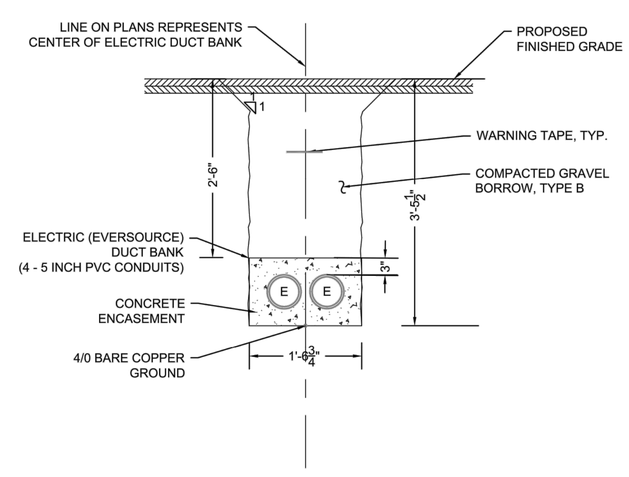

ELECTRIC TRENCH

HIGHWAY GUARD DETAILS

STA 13+21 TO STA 13+31 LT (TRAILING ANCHORAGE)
STA 13+31 TO STA 14+12 LT (TL3)
STA 14+12 TO STA 14+46 LT (TRANSITION)
STA 13+13 TO STA 13+19 RT (TRAILING ANCHORAGE)
STA 13+19 TO STA 13+39 RT (TL3)
STA 13+39 RT TO STA 13+73 RT (TRANSITION)
STA 15+89 LT TO STA 16+25 LT (TRANSITION)
STA 16+25 LT TO STA 16+32 LT (TL3)
STA 16+32 RT TO STA 16+42 LT (TRAILING ANCHORAGE)
STA 15+85 RT TO STA 16+17 RT (TRANSITION)
STA 16+17 RT TO STA 16+24 RT (TL3)
STA 16+24 RT TO STA 16+33 RT (TRAILING ANCHORAGE)

TRAFFIC SIGNAL CONDUIT

NONE

WATER SUPPLY ALTERATIONS

SEE BELOW

DRAINAGE DETAILS

SEE BELOW

NOTE: PROPOSED WATER MAIN INSTALLED WITH LESS THAN 5 FEET OF COVER SHALL BE INSULATED AS DETAILED AND SPECIFIED

SHARON
MASKWONICUT STREET OVER AMTRAK/MBTA

STATE	FED. AID PROJ. NO.	SHEET NO.	TOTAL SHEETS
MA	-	13	86
PROJECT FILE NO.	608079		

UTILITY PLAN

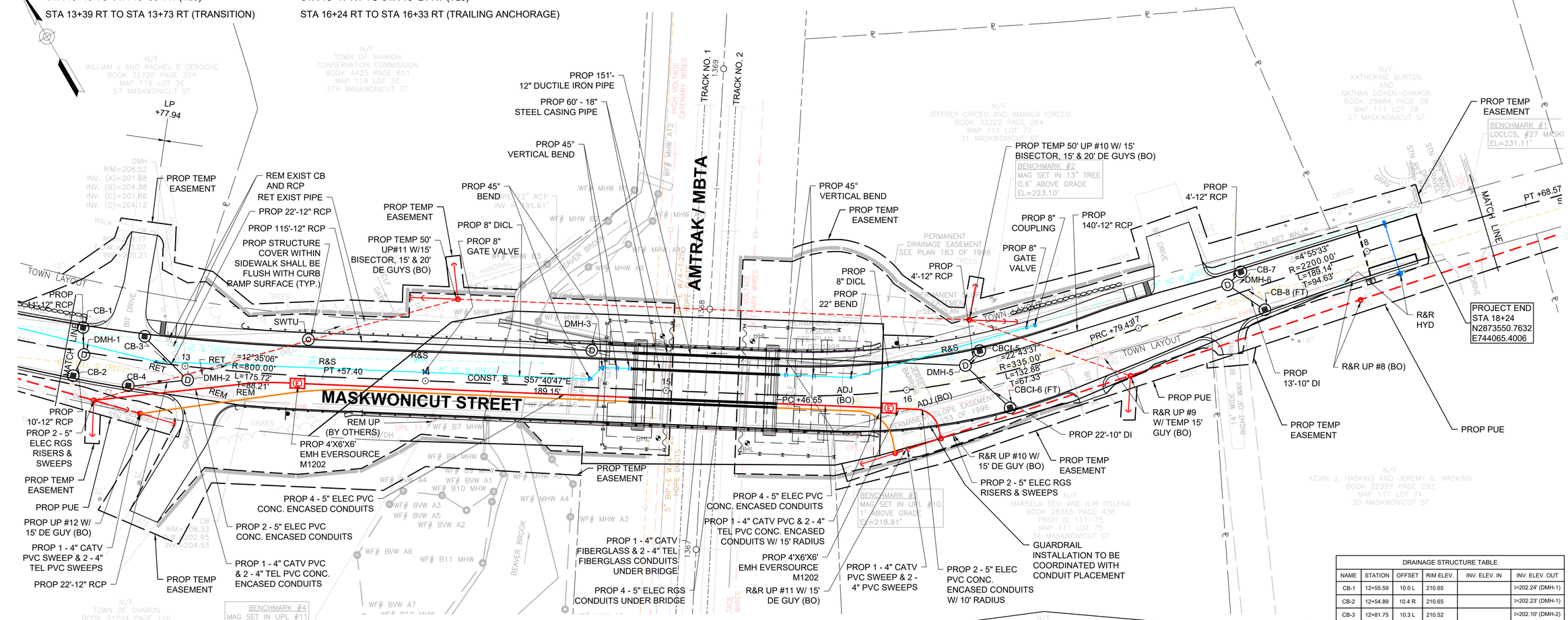

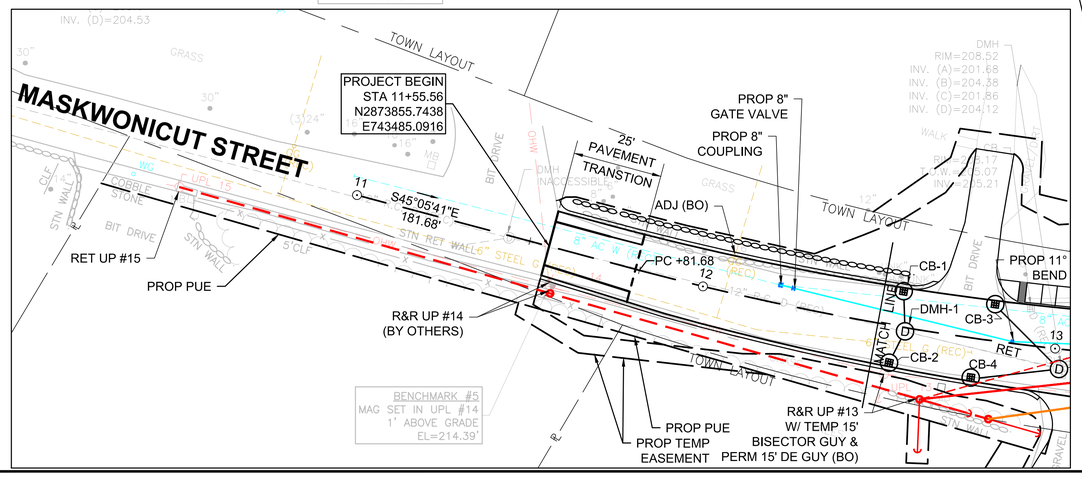

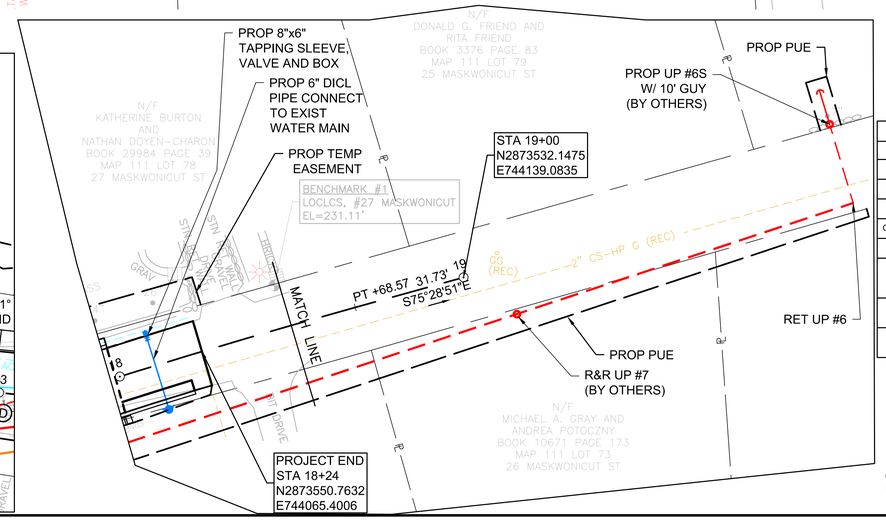

DRAINAGE STRUCTURE TABLE					
NAME	STATION	OFFSET	RIM ELEV.	INV. ELEV. IN	INV. ELEV. OUT
CB-1	12+55.59	10.0 L	210.65		I=202.24' (DMH-1)
CB-2	12+54.89	10.4 R	210.65		I=202.23' (DMH-1)
CB-3	12+81.75	10.3 L	210.52		I=202.10' (DMH-2)
CB-4	12+77.79	11.0 R	210.50		I=202.10' (DMH-2)
DMH-1	12+57.80	1.0 R	210.80	I=202.13' (CB-1) I=202.13' (CB-2)	I=202.13' (DMH-2)
DMH-2	13+01.70	5.6 R	210.76	I=201.86' (CB-3) I=201.86' (CB-4) I=201.86' (DMH-1)	I=201.68' (SWTU)

DRAINAGE STRUCTURE TABLE					
NAME	STATION	OFFSET	RIM ELEV.	INV. ELEV. IN	INV. ELEV. OUT
CB-7	17+47.67	8.1 L	226.59		I=223.24' (DMH-6)
CB-8 (FT)	17+52.11	10.0 R	226.76		I=224.25' (DMH-6)
CBCI-5	16+33.22	11.0 L	222.56		I=219.69' (DMH-5)
CBCI-6 (FT)	16+40.09	14.9 R	222.68		I=220.18' (DMH-5)
DMH-3	14+68.56	15.4 L	217.11	I=213.58' (DMH-5)	I=213.48' (SWTU)
DMH-5	16+25.94	6.3 L	222.43	I=219.65' (CBCI-5) I=220.05' (CBCI-6 (FT)) I=219.65' (DMH-6)	I=219.63' (DMH-3)
DMH-6	17+40.72	4.7 L	226.36	I=223.20' (CB-7) I=223.52' (CB-8 (FT))	I=223.17' (DMH-5)
SWTU	13+50.66	15.2 L	212.36	I=208.82' (DMH-3) I=199.79' (DMH-2)	I=199.78' ()

FOR PROFILE SEE SHEET 5

0 20 50 100
SCALE: 1" = 20'

CONSTRUCTION PLAN.DWG Plotted on 19-Nov-2020 4:52 PM

SHARON
MASKWONICUT STREET OVER AMTRAK/MBTA

STATE	FED. AID PROJ. NO.	SHEET NO.	TOTAL SHEETS
MA	-	14	86
PROJECT FILE NO.	608079		

LANDSCAPING PLAN

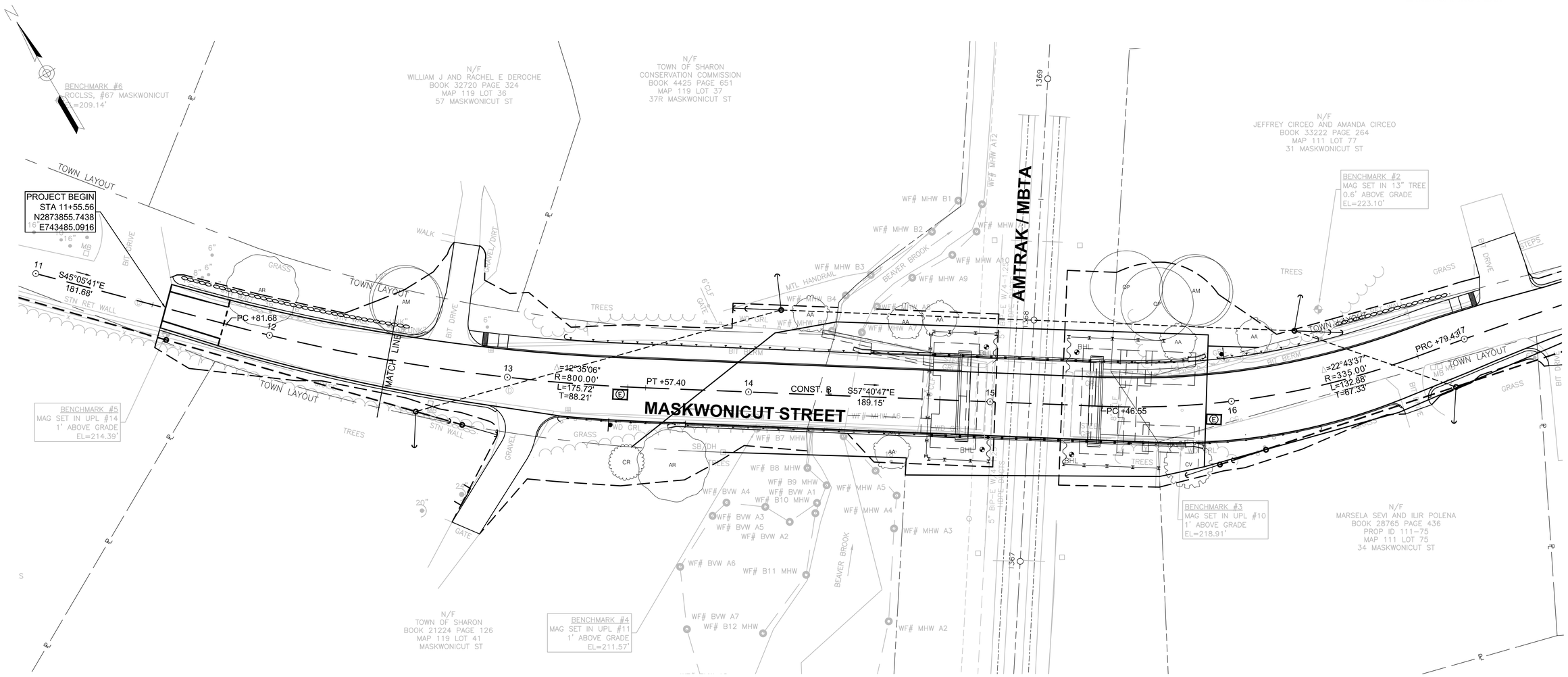

PLANT SCHEDULE

TREES	QTY	BOTANICAL NAME	COMMON NAME	SIZE	CONTAINER
AR	2	Acer rubrum `October Glory`	Red Maple	2"-2.5" cal.	B&B
AM	2	Acer saccharum `Green Mountain` TM	Green Mountain Sugar Maple	2"-2.5" cal.	B&B
AA	6	Amelanchier arborea	Downy Serviceberry	8`-10` Ht.	B&B
CR	1	Cornus x `Rutcan` TM	Constellation Flowering Dogwood	8`-10` Ht.	B&B
CV	1	Crataegus viridis `Winter King`	Winter King Hawthorn	8`-10` Ht.	B&B
QP	2	Quercus palustris	Pin Oak	2.5" Cal.	B&B

0 20 50 100
SCALE: 1" = 20'

CONSTRUCTION PLAN.DWG Plotted on 19-Nov-2020 4:52 PM

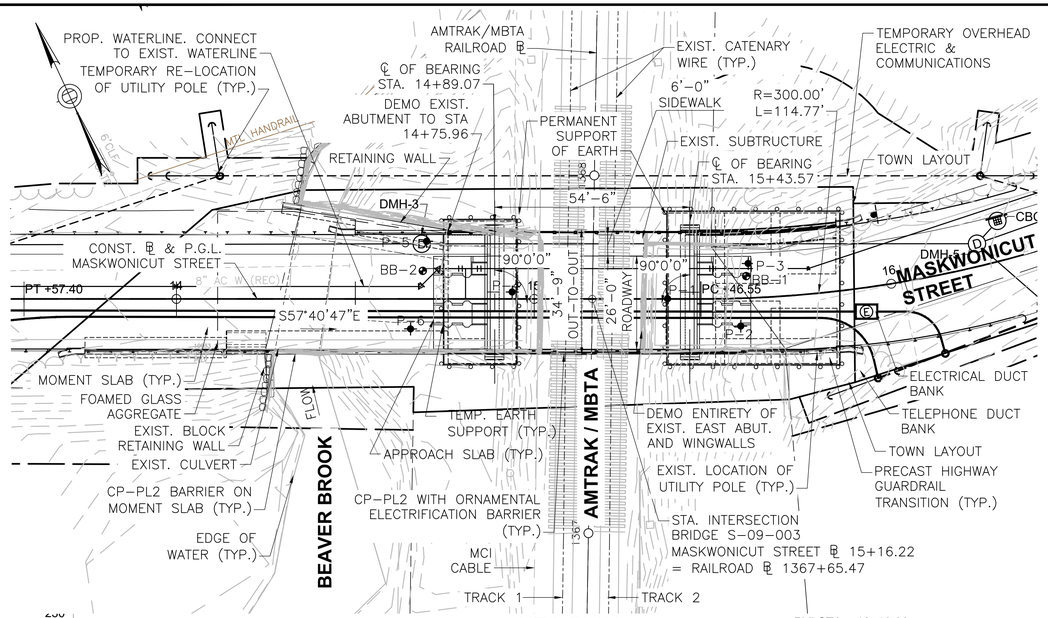

KEY PLAN
SCALE: 1" = 20'

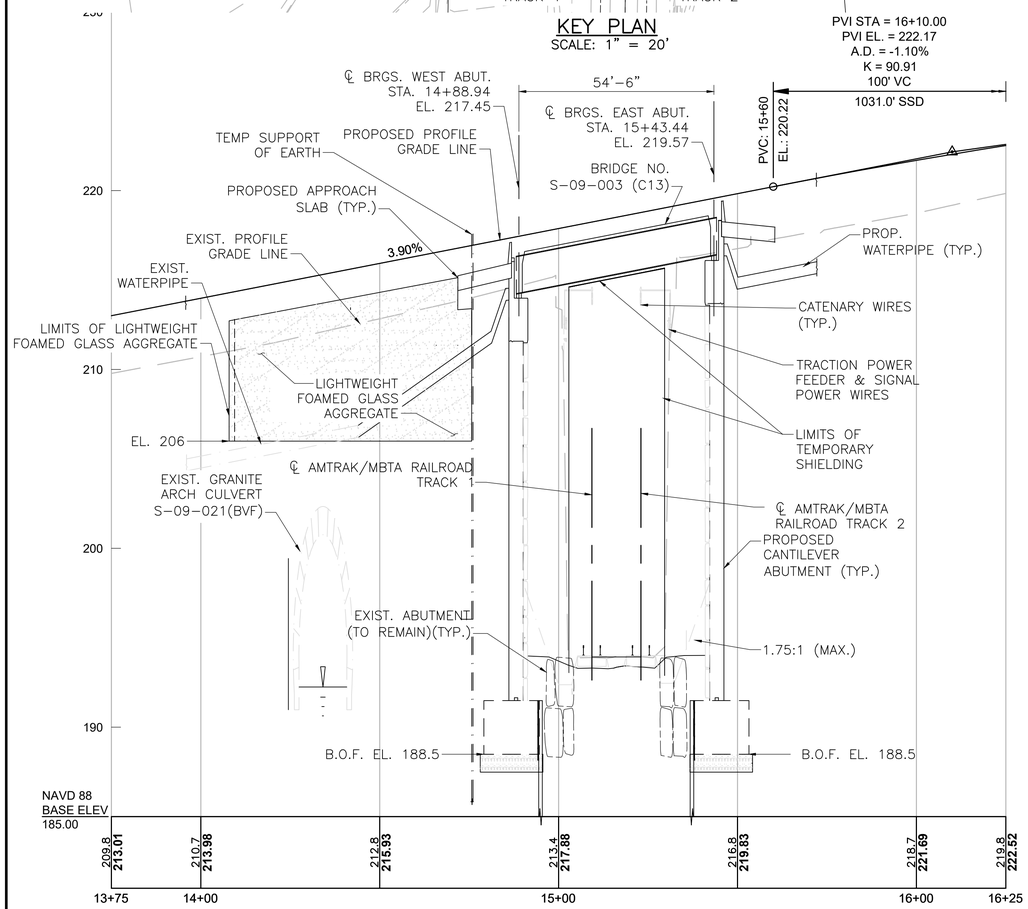

PROFILE ALONG CONST. ℄ AND P.G.L. MASKWONICUT STREET
HORIZONTAL SCALE: 1" = 20'
VERTICAL SCALE: 1" = 4'

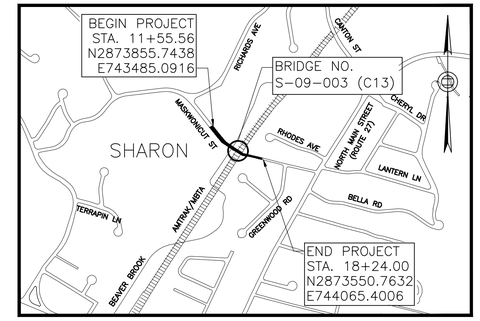

LOCUS
SCALE: 1" = 1000'

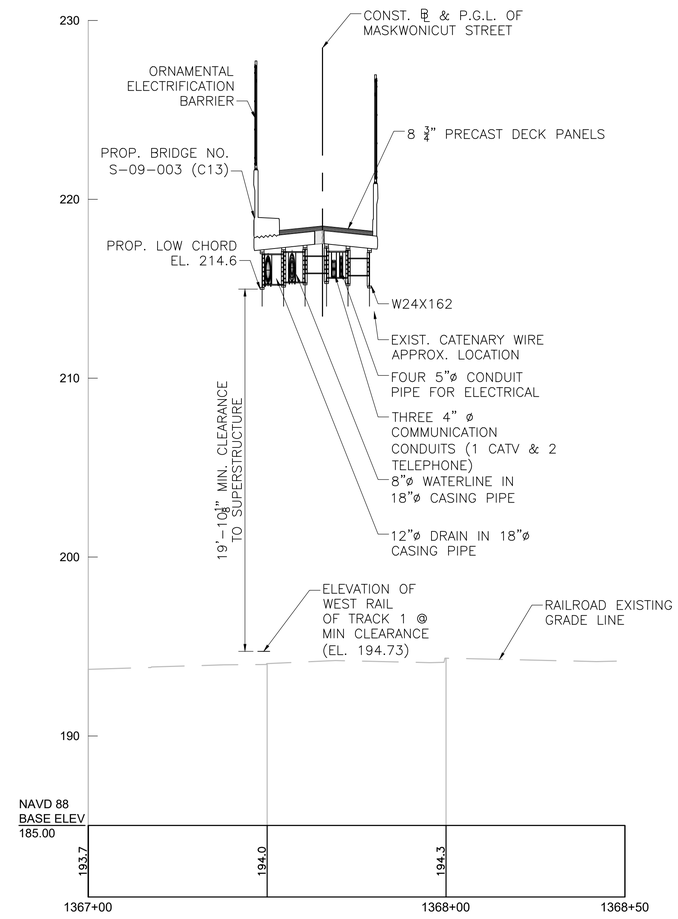

PROFILE ALONG RAILROAD (LOOKING EAST)
HORIZONTAL SCALE: 1" = 20'
VERTICAL SCALE: 1" = 4'

SHARON
MASKWONICUT STREET

STATE	FED. AID PROJ. NO.	SHEET NO.	TOTAL SHEETS
MA	-	15	86
PROJECT FILE NO.	608079		

KEY PLAN, PROFILE AND INDEX

INDEX OF BRIDGE SHEETS:

ESTIMATED QUANTITIES
(NOT GUARANTEED)

ITEM	QUANTITY
BRIDGE EXCAVATION	1700 CY
CLASS B ROCK EXCAVATION	1700 CY
GRAVEL BORROW	40 CY
GRAVEL BORROW FOR BACKFILL STRUCTURES & PIPES	830 CY
CRUSHED STONE FOR BRIDGE FOUNDATIONS	110 CY
SUPERPAVE BRIDGE SURFACE COURSE – 9.5 (SSC-B – 9.5)	14 TONS
SUPERPAVE BRIDGE PROTECTIVE COURSE – 9.5 (SPC-B – 9.5)	14 TONS
LIGHTWEIGHT AGGREGATE	1200 CY
SAWING AND SEALING JOINTS IN ASPHALT PAVEMENT AT BRIDGES	55 FT
PERMANENT STEEL SHEETING	134700 LB
BRIDGE STRUCTURE, BRIDGE NO. S-09-003	1 LS

MONTH DD, YYYY | ISSUED FOR CONSTRUCTION

massDOT Massachusetts Department of Transportation Highway Division

PROPOSED BRIDGE
SHARON
MASKWONICUT STREET
OVER MBTA/AMTRAK RAILROAD
MASSACHUSETTS DEPARTMENT OF TRANSPORTATION
HIGHWAY DIVISION
10 PARK PLAZA BOSTON, MASS

Weston & Sampson
Weston & Sampson Engineers, Inc.
55 Walkers Brook Dr #100, Reading, MA 01867
978.532.1900 800.SAMPSON
www.westonandsampson.com

TITLE: CHIEF ENGINEER

GENERAL NOTES

DESIGN

IN ACCORDANCE WITH THE 2017 AMERICAN ASSOCIATION OF STATE HIGHWAY AND TRANSPORTATION OFFICIALS LRFD BRIDGE DESIGN SPECIFICATIONS WITH CURRENT INTERIM SPECIFICATIONS THROUGH 2019, FOR HL-93 LOADING.

EXISTING BRIDGE PLANS

IF REQUIRED, PLANS FOR THE EXISTING BRIDGE DATED, NOVEMBER 19, 1938, JANUARY 31, 1939, AND OCTOBER 13, 1988 MAY BE SEEN AT THE OFFICE OF THE BRIDGE ENGINEER, MASSDOT – HIGHWAY DIVISION, 10 PARK PLAZA, BOSTON, MASSACHUSETTS.

EXISTING CONDITIONS

DIMENSIONS SHOWN AND DETAIL DEPICTED ARE BASED UPON THE ORIGINAL BRIDGE PLANS AND ARE NOT GUARANTEED. THE CONTRACTOR SHALL DETERMINE AND ESTABLISH ALL DIMENSIONS AND DETAILS NECESSARY FOR COMPLETION OF ALL WORK BY FIELD MEASUREMENT AND SURVEY. THE CONTRACTOR SHALL BE RESPONSIBLE AND NOT ORDER ANY MATERIAL OR COMMENCE ANY FABRICATION UNTIL HE/SHE HAS MADE THE REQUIRED MEASUREMENTS ON THE ACTUAL STRUCTURE AND THE EXTENT OF THE PROPOSED WORK HAS BEEN APPROVED BY THE ENGINEER.

MASSDOT BENCH MARK:

#1: LOCLCS, #27 MASKWONICUT – EL. 231.11'
#2: MAG SET IN 13" TREE 0.6' ABOVE GRADE – EL. 223.10'
#3: MAG SET IN UPL #10 1' ABOVE GRADE – EL. 218.91'
#4: MAG SET IN UPL #11 1' ABOVE GRADE – EL. 211.57'
#5: MAG SET IN UPL #14 1' ABOVE GRADE – 214.39'
#6: ROCLSS, #67 MASKWONICUT – EL. 209.14'

ELEVATIONS ARE BASED ON THE NORTH AMERICAN VERTICAL DATUM (NAVD) OF 1988.

DATE

TO BE PLACED ON THE INSIDE FACE OF THE NORTHEAST AND SOUTHWEST HIGHWAY GUARDRAIL TRANSITIONS, DATES TO BE PLACED ON THE LEADING HIGHWAY GAURDRAIL TRANSITION. A SHEET SHOWING SIZE AND CHARACTER OF NUMERALS WILL BE FURNISHED. THE DATE USED SHALL BE THE LATEST YEAR OF CONTRACT COMPLETION AS OF THE DATE THE FIRST HIGHWAY GUARDRAIL TRANSITION IS CONSTRUCTED. BOTH HIGHWAY GUARDRAIL TRANSITIONS SHALL FEATURE THE SAME DATE.

MASSDOT SURVEY NOTEBOOKS:

ELECTRONIC SURVEY BY GREEN INTERNATIONAL. SURVEY NOTES ARE RECORDED IN MASSDOT FIELD NOTEBOOK (23140).

SCALES

SCALES NOTED ON THE PLANS ARE NOT APPLICABLE TO REDUCED SIZE PRINTS. DIVIDE SCALES BY 2 FOR HALF-SIZE PRINTS (A3).

FOUNDATIONS

FOUNDATIONS MAY BE ALTERED, IF NECESSARY, TO SUIT CONDITIONS ENCOUNTERED DURING CONSTRUCTION, WITH APPROVAL OF THE ENGINEER.

UNSUITABLE MATERIALS

ALL UNSUITABLE MATERIAL SHALL BE REMOVED WITHIN THE LIMITS OF THE FOUNDATIONS OF THE STRUCTURE, AS DIRECTED BY THE ENGINEER.

REINFORCEMENT

REINFORCING STEEL SHALL CONFORM TO THE REQUIREMENTS OF AASHTO M31 GRADE 60. UNLESS OTHERWISE NOTED ON THE CONSTRUCTION DRAWINGS, ALL BARS SHALL BE LAPPED AS FOLLOWS:

MODIFICATION CONDITION	#4 BARS	#5BARS
1. NONE	21"	26"
2. 12" OF CONCRETE BELOW BAR	29"	38"
3. COATED BARS, COVER < $3d_b$, OR CLEAR SPACING < $6d_b$	31"	39"
4. COATED BARS, ALL OTHER CASES	25"	31"
5. CONDITION 2. AND 3.	35"	44"
6. CONDITION 2. AND 4.	34"	43"

IF THE ABOVE BARS ARE SPACED 6" OR MORE ON CENTER, THE LAP LENGTH SHALL BE 80% OF THE LAP LENGTH GIVEN ABOVE. ALL OTHER BARS SHALL BE LAPPED AS SHOWN ON THE CONSTRUCTION DRAWINGS.

EPOXY COATED BARS

ALL REINFORCING BARS AND SUPPORTING DEVICES SHALL BE COATED UNLESS OTHERWISE NOTED.

UTILITIES

LOCATIONS OF EXISTING UTILITIES SHOWN ARE APPROXIMATE. THE CONTRACTOR SHALL LOCATE AND PROTECT FROM DAMAGE ALL EXISTING UTILITIES.

GEOTECHNICAL INSTRUMENTATION

CONTRACTOR SHALL FURNISH AND INSTALL GEOTECHNICAL INSTRUMENTATION IN ACCORDANCE WITH ITEM 163. OF THE SPECIAL PROVISIONS. THE INSTRUMENTATION SHALL BE IN PLACE PRIOR TO THE COMMENCEMENT OF WORK.

CONCRETE MIX:

THE CEMENT CONCRETE SPECIFIED BELOW SHALL BE USED ON THE FOLLOWING BRIDGE COMPONENTS:

4000 PSI, $1\frac{1}{2}$", 565 CEMENT CONCRETE.....ABUTMENT STEMS, ABUTMENT FOOTINGS, APPROACH SLAB, CURTAIN WALL, WINGWALLS

4000 PSI, $\frac{3}{4}$", 610 CEMENT CONCRETE.....BACKWALL, KEEPER BLOCK

4000 PSI, $\frac{3}{4}$", 585 HP CEMENT CONCRETE.....END DIAPHRAGMS, PRECAST DECK PANELS, DECK CLOSURE POURS

5000 PSI, $\frac{3}{4}$" 685 HP CEMENT CONCRETE.....SAFETY CURBS, PRECAST HIGHWAY GUARDRAIL TRANSITIONS

RAILROAD REQUIREMENTS:

1. ALL WORK WITHIN AMTRAK/MBTA RIGHT-OF-WAY AND ADJACENT TO TRACKS SHALL BE PERFORMED IN ACCORDANCE WITH THE REQUIREMENTS OF AMTRAK ENGINEERING PRACTICE EP3014 "MAINTENANCE AND PROTECTION OF RAILROAD TRAFFIC DURING CONTRACTOR OPERATIONS". AMTRAK ENGINEERING PRACTICE EP3014 IS PROVIDED IN THE SPECIAL PROVISIONS.
2. TEMPORARY PROTECTION SHIELDS FOR DEMOLITION AND CONSTRUCTION OF OVERHEAD BRIDGES SHALL BE DESIGNED IN CONFORMANCE WITH AMTRAK'S ENGINEERING PRACTICE EP 3014 SECTION 01520 "REQUIREMENTS FOR TEMPORARY PROTECTION SHIELDS FOR DEMOLITION AND CONSTRUCTION OF OVERHEAD BRIDGES AND OTHER STRUCTURES".
3. CONSTRUCTION RELATED DEBRIS THAT FALLS ONTO AMTRAK PROPERTY, FOULS TRACK BALLAST OR DAMAGES AMTRAK'S TRACK OR INFRASTRUCTURE SHALL BE IMMEDIATELY REPORTED TO AMTRAK. RIGHT-OF-WAY CLEAN UP, BALLAST CLEANING, TRACK REPAIR OR OTHER REPAIR WILL BE PERFORMED BY AMTRAK FORCES AT THE CONTRACTOR'S EXPENSE.
4. ALL UNDERGROUND UTILITIES, CABLE, AND FACILITIES MUST BE LOCATED AND PROTECTED BEFORE ANY EXCAVATING, DRILLING, GROUND PENETRATING ACTIVITIES, OR CONSTRUCTION TAKES PLACE. THIS INCLUDES RAILROAD AND COMMERCIAL UTILITIES, CABLES, DUCT LINES, AND FACILITIES. THESE ACTIVITIES WILL NOT BE PERFORMED IN CLOSE PROXIMITY TO THE AMTRAK DUCT LINES UNLESS MONITORED BY ON-SITE AMTRAK COMMUNICATIONS AND SIGNAL (c&s) DEPARTMENT PERSONNEL. HAND DIGGING MAY BE REQUIRED, AS DIRECTED BY AMTRAK THROUGH THE ON-SITE AMTRAK C&S SUPPORT PERSONNEL. AMTRAK MAINTAINS THE RIGHT TO ACCESS ALL EXISTING CABLES AND CONDUITS THROUGHOUT CONSTRUCTION. AMTRAK ALSO RESERVES THE RIGHT TO UPGRADE AND INSTALL NEW CABLES AND CONDUITS IN THE AFFECTED AREA. THE "ONE-CALL" PROCESS MUST BE FOLLOWED. PLEASE NOTE THAT AMTRAK IS NOT PART OF THE ONE-CALL PROCESS; CONTACT AMTRAK ENGINEERING TO HAVE ALL AMTRAK UNDERGROUND UTILITIES AND ASSETS LOCATED. PRECAUTIONS MUST BE TAKEN TO PREVENT ANY INTERRUPTION TO AMTRAK'S OPERATION.
5. A MINIMUM SIGNAL PREVIEW DISTANCE SHALL NOT BE LESS THAN 1500 FEET. SIGNAL PREVIEW IS MEASURED FROM A POINT 13 FEET ABOVE THE TOP OF RAIL, AT A MINIMUM OF 1500 FEET FROM THE TOP SIGNAL HEAD ("A" HEAD) OF THE SIGNAL THE TRAIN IS APPROACHING. ALL TEMPORARY STRUCTURES, FORMWORK, EQUIPMENT, ETC. MUST COMPLY DURING CONSTRUCTION.
6. AMTRAK C&S PERSONNEL AT THE SITE SHOULD VERIFY THAT THERE IS NOT SIGNAL EQUIPMENT IN THE WAY OF THE PROJECT AND THAT SIGNAL PREVIEW IS NOT BEING OBSTRUCTED.
7. ANY WORK DONE ON AMTRAK PROPERTY THAT INVOLVES HEAVY TRUCKS, EQUIPMENT, OR MACHINERY ALONG THE RIGHT-OF-WAY SHALL HAVE THE DUCT LINES AND PULL BOXES INSPECTED TO INSURE THE CAN WITHHOLD THE APPROPRIATE WEIGHT.
8. RAILS MUST BE PROTECTED AGAINST DEBRIS. RUST, SAND, METAL SHAVINGS OR OTHER MATERIAL CAN INTERFERE WITH THE PROPER SHUNTING SENSITIVITY OF THE TRACK CIRCUIT.
9. WHENEVER WORK IS PERFORMED IN THE VICINITY OF ELECTRIFIED TRACKS AND/OR HIGH VOLTAGE WIRES, PARTICULAR CARE MUST BE EXERCISED, AND RAILROAD'S REQUIREMENTS REGARDING CLEARANCE BE MAINTAINED BETWEEN EQUIPMENT AND TRACKS AND/OR ENERGIZED WIRES. CONTRACTORS MUST SUPPLY AN ADEQUATE LENGTH OF GROUNDING CABLE ($\frac{1}{0}$) COPPER WITH APPROVED CLAMPS0 FOR EACH PIECE OF EQUIPMENT WORKING NEAR OR ADJACENT TO ANY OVERHEAD WIRE IN ACCORDANCE WITH AMTRAK SPECIFICATION 16064.
10. ANY WORK PERFORMED WITHIN 15 FEET OF THE OVERHEAD WIRES MUST BE DONE UNDER THE PROTECTION OF AN AMTRAK CLASS "A" EMPLOYEE.

SUGGESTED CONSTRUCTION SEQUENCE:

1. INSTALL EROSION CONTROLS.
2. CLEAR, GRUB AND REMOVE TREES AS REQUIRED.
3. INSTALL TEMPORARY UTLITIES.
4. INSTALL TEMPORARY EARTH SUPPORT BEHIND EXISTING WEST ABUTMENT AND EAST ABUTMENT. INSTALL PERMANENT EARTH SUPPORT ALONG THE FRONT FACE OF THE EXISTING WEST AND EAST ABUTMENTS, PARALLEL WITH THE RAILROAD TRACKS.
5. DEMOLISH EXISTING WEST ABUTMENT AND WINGWALLS TO LIMIT OF TEMPORARY EARTH SUPPORT.
6. PREPARE SUBGRADE FOR PROPOSED WEST ABUTMENT AND WINGWALLS.
7. INSTALL CAST IN PLACE CONCRETE ABUTMENT AND WINGWALL FOOTINGS AND STEMS ON THE WEST SIDE OF THE BRIDGE.
8. BACKFILL BETWEEN NEWLY CONSTRUCTED ABUTMENT AND TEMPORARY EARTH SUPPORT TO BOTTOM OF APPROACH SLAB ELEVATION.
9. EXCAVATE TO VERTICAL & HORIZONTAL LIMITS SHOWN AT EXISTING GRANITE ARCH CULVERT (S-09-002). INSTALL LIGHTWEIGHT AGGREGATE FILL.
10. REMOVE/CUT OFF TEMPORARY EARTH SUPPORT, 2 FOOT BELOW FINISHED GRADE, BEHIND NEW ABUTMENT.
11. DEMOLISH EXISTING EAST ABUTMENT AND WINGWALLS.
12. PREPARE SUBGRADE FOR PROPOSED EAST ABUTMENT AND WINGWALLS.
13. INSTALL CAST IN PLACE CONCRETE ABUTMENT AND WINGWALL FOOTINGS AND STEMS ON THE EAST SIDE OF THE BRIDGE.
14. BACKFILL BEHIND PROPOSED EAST ABUTMENT TO BOTTOM OF APPROACH SLAB ELEVATION.
15. INSTALL BEARING PADS.
16. INSTALL STEEL GIRDERS, DIAPHRAGMS AND SHEAR STUDS.
17. INSTALL UTILITIES.
18. INSTALL PRECAST CONCRETE DECK PANELS INCLUDING POST TENSIONING.
19. PLACE CONCRETE FOR CLOSURE POURS AND END DIAPHRAGMS.
20. INSTALL REINFORCING STEEL AND PLACE CONCRETE FOR SIDEWALK AND BARRIER CURBS.
21. INSTALL ORNAMENTAL ELECTRIFICATION BARRIER ON TOP OF BARRIER CURB.
22. INSTALL CAST IN PLACE CONCRETE APPROACH SLAB ON EAST AND WEST ABUTMENTS.
23. INSTALL CAST IN PLACE MOMENT SLAB.
24. APPLY MEMBRANE WATERPROOFING TO PRECAST DECK PANELS.
25. PERFORM FULL DEPTH ROADWAY RECONSTRUCTION ON EITHER SIDE OF BRIDGE APPROACH.
26. PLACE FINAL PAVING, LINE STRIPING AND GUARDRAIL INSTALLATION.

NOTE: FOR OCS COORDINATION AND GROUNDING & BONDING REQUIREMENTS, SEE HNTB SUBMISSION

SHARON
MASKWONICUT STREET

STATE	FED. AID PROJ. NO.	SHEET NO.	TOTAL SHEETS
MA	-	16	86
PROJECT FILE NO.	608079		

GENERAL NOTES

TRAFFIC DATA	ROADWAY OVER	ROADWAY UNDER
DESIGN YEAR	N/A	N/A
AVERAGE DAILY TRAFFIC – PRESENT	N/A	N/A
AVERAGE DAILY TRAFFIC – DESIGN YEAR	N/A	N/A
DESIGN HOURLY VOLUME	N/A	N/A
DIRECTIONAL DISTRIBUTION	N/A	N/A
TRUCK PERCENTAGE – AVERAGE DAY	N/A	N/A
TRUCK PERCENTAGE – PEAK HOUR	N/A	N/A
DESIGN SPEED	N/A	N/A
DIRECTIONAL DESIGN HOURLY VOLUME	N/A	N/A

SEISMIC DESIGN CRITERIA	
DESIGN RETURN PERIOD:	1000-YR
DESIGN SPECTRA	
As	0.106g
SDs	0.220g
SD1	0.106g
SITE CLASS	D
SEISMIC DESIGN CATEGORY (SDC)	A

HYDRAULIC DESIGN DATA	
DRAINAGE AREA (SQ. MILES)	N/A
DESIGN FLOOD DISCHARGE (C.F.S.)	N/A
DESIGN FLOOD FREQUENCY (YEARS)	N/A
DESIGN FLOOD VELOCITY (F.P.S.)	N/A
DESIGN FLOOD ELEVATION (FEET, NAVD)	N/A
BASE (100-YEAR) FLOOD DATA	
BASE FLOOD DISCHARGE (C.F.S.)	N/A
BASE FLOOD ELEVATION (FEET, NAVD)	N/A
DESIGN AND CHECK SCOUR DATA	
DESIGN SCOUR FLOOD EVENT RETURN FREQUENCY (YEARS)	N/A
DESIGN FLOOD ABUTMENT SCOUR DEPTH (FEET)	N/A
DESIGN FLOOD PIER SCOUR DEPTH (FEET)	N/A
CHECK SCOUR FLOOD EVENT RETURN FREQUENCY (YEARS)	N/A
CHECK FLOOD ABUTMENT SCOUR DEPTH (FEET)	N/A
CHECK FLOOD PIER SCOUR DEPTH (FEET)	N/A
FLOOD OF RECORD	
DISCHARGE (C.F.S.)	N/A
FREQUENCY (IF KNOWN, YEARS)	N/A
MAXIMUM ELEVATION (FEET, NAVD)	N/A
DATE (MM/YYYY)	N/A
HISTORY OF ICE FLOES	N/A
EVIDENCE OF SCOUR AND EROSION	N/A

TEMPORARY WATER CONTROL DESIGN DATA	
DESIGN FLOOD DISCHARGE (C.F.S.)	N/A
DESIGN FLOOD FREQUENCY (YEARS)	N/A
DESIGN FLOOD VELOCITY (F.P.S.)	N/A
DESIGN FLOOD ELEVATION (FEET, NAVD)	N/A

BORING BB–1

STATION: 15+58.45 ±
OFFSET: 7.25' LEFT
GROUND ELEVATION: 217.00

Weston & Sampson

PROJECT: Maskwonicut St. Bridge, MassDOT, Sharon, MA

REPORT OF BORING No. B-1
SHEET 1 OF 2
Project No. 2150851
CHKD BY Christopher J. Palmer, PE

BORING Co. New England Boring Contractors
FOREMAN Jason Stokes
WSE ENGINEER: Julie A. Eaton, EIT

BORING LOCATION See attached plan*
GROUND SURFACE ELEV. EL. 217+/- DATUM NAVD88
DATE START 6/20/16 DATE END 6/22/16

SAMPLER: 2 IN. OD SPLIT SPOON SAMPLER (SPT) DRIVEN 24 INCHES USING A 140 lb. CAT HEAD OPERATED SAFETY HAMMER.
CASING: DRIVEN 4" CASING USING A 300 LB. HAMMER FALLING 30 IN. AND THE DRIVE AND WASH TECHNIQUE
CASING SIZE: 4 IN. INSIDE DIAMETER. OTHER: See note 7

GROUNDWATER READINGS

DATE	TIME	WATER AT	CASING AT	STABILIZATION TIME
6/22/2016	7:30	25 ft. +/-	33 ft. +/-	12+ hours

DEPTH (feet)	CASING (blows/ft)	SAMPLE No.	REC/PEN (in)	DEPTH (ft)	BLOWS/6"	SAMPLE DESCRIPTION	NOTES	STRATUM DESCRIPTION
0		S-1	9/18	0.5-2	12-10-9	Medium dense, light brown, fine to medium SAND FILL, little gravel, little silt; moist.	1	5" AC PAVEMENT
							2	10" SAND SUB-BASE
		S-2	11/24	2-4	9-26-22-12	Dense, dark gray, GRAVEL FILL, little sand, trace silt, trace debris (concrete); moist. (LAF)		LIGHTWEIGHT AGGREGATE FILL (LAF)
5		S-3	17/24	4-6	10-6-9-9	Medium dense, dark gray, GRAVEL FILL, little sand, trace silt; moist. (LAF)		
		S-4	14/24	6-8	13-8-6-13	Medium dense, dark gray, GRAVEL FILL, little sand, trace silt; moist. (LAF)		
		S-5	4/24	8-10	10-11-13-8	Medium dense, brown, gravelly, fine to coarse SAND, little to some silt; wet.	3	SAND AND GRAVEL
10		S-6	6/24	10-12	10-14-10-9	Medium dense, brown, gravelly, fine to coarse SAND, little to some silt; wet.		
		S-7	8/24	12-14	12-9-12-12	Medium dense, brown, fine to medium SILTY SAND, little to some gravel; wet.		
15		S-8	3/24	14-16	14-15-32-18	Dense, brown, GRAVEL, some sand, some silt; wet.	4	
20		S-9	14/24	19-21	19-17-25-48	Dense, brown, fine to coarse SILTY SAND, little gravel; wet.		
25		S-10	13/22	24-25.8	34-70-76-100/4"	Very dense, gray, gravelly, fine to coarse SAND, little silt; wet.	5	
30		S-11	0/2	29-29.2	100/2"	Very dense, no recovery.	6	GLACIAL TILL
		S-12	0/0	33	100/0"	Very dense, no penetration.		

GRANULAR SOILS BLOWS/FT	DENSITY	COHESIVE SOILS BLOWS/FT	DENSITY
0-4	V. LOOSE	0-2	V. SOFT
4-10	LOOSE	2-4	SOFT
10-30	M. DENSE	4-8	M. STIFF
30-50	DENSE	8-15	STIFF
> 50	V. DENSE	15-30	V. STIFF
		> 30	HARD

NOTES:
1. Asphalt Concrete (AC) pavement includes measurement of 1" binded gravel base observed in hole.
2. Bottom 6" grades to dark gray, fine to coarse SAND FILL, some gravel, some silt, trace debris (brick); moist. (Lightweight Aggregate Fill - LAF)
3. Possible cobble fragments in sample.
4. Sporadic roller bit grinding from 14 ft. to 19 ft. indicating presence of cobbles and/or boulders.
5. Sporadic roller bit grinding from 24 ft. to 29 ft. with gravel fragements observed in drill fluid.
6. Difficult to drive 4" casing from 29 to 34 ft. Open hole drilling below 34 ft. for S-13 and S-14.

* Retaining wall height was approximately 8 ft. +/- in the vicinity of B-1.

GENERAL NOTES: i) THE STRATIFICATION LINES REPRESENT THE APPROXIMATE BOUNDARY BETWEEN SOIL TYPES. TRANSITIONS MAY BE GRADUAL.
ii) WATER LEVEL READINGS HAVE BEEN MADE IN THE DRILL HOLES AT TIMES AND UNDER CONDITIONS STATED ON THIS BORING LOG. FLUCTUATIONS IN THE LEVEL OF GROUNDWATER MAY OCCUR DUE TO OTHER FACTORS THAN THOSE PRESENT AT THE TIME MEASUREMENTS ARE MADE.

BORING No. B-1

\\wse03.local\WSE\Projects\MA\MassDOT\77888 Statewide\Sharon Bridge_S-09-003\Geotechnical\Field\[Boring Logs.xlsx]B-2

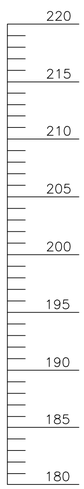

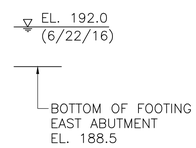

BORING BB–1 (CONT.)

STATION: 15+58.45 ±
OFFSET: 7.25' LEFT
GROUND ELEVATION: 217.00

Weston & Sampson

PROJECT: Maskwonicut St. Bridge, MassDOT, Sharon, MA

REPORT OF BORING No. B-1
SHEET 2 OF 2
Project No. 2150851
CHKD BY Christopher J. Palmer, PE

BORING Co. New England Boring Contractors
FOREMAN Jason Stokes
WSE ENGINEER: Julie A. Eaton, EIT

BORING LOCATION See attached plan
GROUND SURFACE ELEV. EL. 217+/- DATUM NAVD88
DATE START 6/20/16 DATE END 6/22/16

SAMPLER: 2 IN. OD SPLIT SPOON SAMPLER (SPT) DRIVEN 24 INCHES USING A 140 lb. CAT HEAD OPERATED SAFETY HAMMER.
CASING: DRIVEN 4" CASING USING A 300 LB. HAMMER FALLING 30 IN. AND THE DRIVE AND WASH TECHNIQUE
CASING SIZE: 4 IN. INSIDE DIAMETER. OTHER: See note 7

GROUNDWATER READINGS

DATE	TIME	WATER AT	CASING AT	STABILIZATION TIME
6/22/2016	7:30	25 ft. +/-	33 ft. +/-	12+ hours

DEPTH (feet)	CASING (blows/ft)	SAMPLE No.	REC/PEN (in)	DEPTH (ft)	BLOWS/6"	SAMPLE DESCRIPTION	NOTES	STRATUM DESCRIPTION
35							7	
		S-13	0/0	37	60/0"	Very dense, no penetration.	8	
40		S-14	2/2	39-39.2	100/2"	Very dense, brown-gray, fine to coarse SAND, little gravel, little silt, trace clay; wet.	9	GLACIAL TILL
							10	
45		S-15	2/3	45-45.3	100/3"	Very dense, light gray-brown, (weathered bedrock) GRAVEL, trace sand, trace silt; wet.	11	WEATHERED BEDROCK
						SPT Refusal at 45.3 ft.		
50								
55								
60								
65								

GRANULAR SOILS BLOWS/FT	DENSITY	COHESIVE SOILS BLOWS/FT	DENSITY
0-4	V. LOOSE	0-2	V. SOFT
4-10	LOOSE	2-4	SOFT
10-30	M. DENSE	4-8	M. STIFF
30-50	DENSE	8-15	STIFF
> 50	V. DENSE	15-30	V. STIFF
		> 30	HARD

NOTES:
7. 4" casing refusal at 35 ft. due to drive shoe damage. Advanced through collapsed 4" casing drive shoe with roller bit and then telescoped 3" casing. Replaced tri-cone roller bit.
8. Switch to 300 lb hammer to attempt to obtain sample. 56 blows, no penetration. Wash material in spoon was brown, fine to coarse SILTY SAND, little gravel.
9. Slow rollerbit advance and grinding from 37 ft. to 38 ft., 38.5 ft. to 39 ft., 41 ft. to 42.3 ft., and 43.3 ft. to 44 ft. indicating presence of boulders. At 42.3 ft., replaced tri-cone roller bit.
10. 3" casing refusal at 43 ft.
11. Refusal at 45.3 ft. Core not possible due to damaged 3" casing. Upon 3" casing removal, bottom 10 ft. appeared bowed and flat on one side, indicating likely damage from boulders.

GENERAL NOTES: i) THE STRATIFICATION LINES REPRESENT THE APPROXIMATE BOUNDARY BETWEEN SOIL TYPES. TRANSITIONS MAY BE GRADUAL.
ii) WATER LEVEL READINGS HAVE BEEN MADE IN THE DRILL HOLES AT TIMES AND UNDER CONDITIONS STATED ON THIS BORING LOG. FLUCTUATIONS IN THE LEVEL OF GROUNDWATER MAY OCCUR DUE TO OTHER FACTORS THAN THOSE PRESENT AT THE TIME MEASUREMENTS ARE MADE.

BORING No. B-1

\\wse03.local\WSE\Projects\MA\MassDOT\77888 Statewide\Sharon Bridge_S-09-003\Geotechnical\Field\[Boring Logs.xlsx]B-2

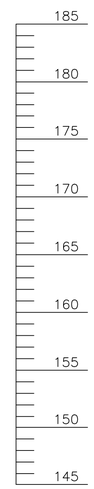

BORING/PROBE NOTES:

1. LOCATION OF BORING SHOWN ON THE PLAN THUS BB
2. LOCATION OF PROBES SHOWN ON THE PLAN THUS P–1, P–2, ...
3. BORINGS AND PROBES ARE TAKEN FOR PURPOSE OF DESIGN AND SHOW CONDITIONS AT BORING POINTS AND PROBE POINTS ONLY, BUT DO NOT NECESSARILY SHOW THE NATURE OF THE MATERIALS TO BE ENCOUNTERED DURING CONSTRUCTION.
4. WATER LEVELS SHOWN ON THE BORING LOGS WERE OBSERVED AT THE TIME OF TAKING BORINGS AND DO NOT NECESSARILY SHOW THE TRUE GROUND WATER LEVEL.
5. FIGURES IN COLUMNS INDICATE NUMBER OF BLOWS REQUIRED TO DRIVE A 2" I.D. SPLIT SPOON SAMPLER 24" USING A 140 POUND WEIGHT FALLING 30".
6. BORING SAMPLES ARE STORED AT A STORAGE FACILITY LOCATED ON ROUTE 114 (219 WINTHROP AVE.) LAWRENCE, MA. THE CONTRACTOR MAY EXAMINE THE SOIL AND SAMPLES BY CONTACTING THE MASSDOT GEOTECHNICAL SECTION AT 10 PARK PLAZA, BOSTON, MA.
7. ALL BORINGS WERE MADE IN JUNE 2016. ALL PROBES WERE MADE IN AUGUST 2016.
8. BORINGS AND PROBES WERE MADE BY NEW ENGLAND BORING CONTRACTORS. (40 FORDWAY STREET DERRY, NH 03038)
9. THE NORTH AMERICAN VERTICAL DATUM (NAVD) OF 1988 IS USED THROUGHOUT.

xxx xx xxxx	ISSUED FOR CONSTRUCTION
DATE	
USE ONLY PRINTS OF LATEST DATE	

BORING BB–2

STATION: 14+69.05 ±
OFFSET: 7.36' LEFT
GROUND ELEVATION: 213.5

Weston & Sampson

PROJECT	REPORT OF BORING No. B-2
Maskwonicut St. Bridge, MassDOT, Sharon, MA	SHEET 1 OF 2
	Project No. 2150851
	CHKD BY Christopher J. Palmer, PE

BORING Co. New England Boring Contractors
FOREMAN Jason Stokes
WSE ENGINEER: Julie A. Eaton, EIT
BORING LOCATION See attached plan*
GROUND SURFACE ELEV. EL. 213.5+/- DATUM NAVD88
DATE START 6/23/16 DATE END 6/27/16

SAMPLER: 2 IN. OD SPLIT SPOON SAMPLER (SPT) DRIVEN 24 INCHES USING A 140 lb. CAT HEAD OPERATED SAFETY HAMMER.
CASING: DRIVEN 4" CASING USING A 300 LB. HAMMER FALLING 30 IN. AND THE DRIVE AND WASH TECHNIQUE
CASING SIZE: 5 IN. INSIDE DIAMETER. OTHER: See note 8

GROUNDWATER READINGS

DATE	TIME	WATER AT	CASING AT	STABILIZATION TIME
6/27/2016	10:30	24 ft. +/-	27 ft. +/-	1.5 hours

DEPTH (feet)	CASING (blows/ft)	SAMPLE No.	REC/PEN (in)	DEPTH (ft)	BLOWS/6"	SAMPLE DESCRIPTION	NOTES	STRATUM DESCRIPTION
0		S-1	11/18	0.5-2	20-13-11	Medium dense, light brown, fine to coarse SAND FILL, little gravel, little silt; moist.	1	6" AC PAVEMENT
								11" SAND SUB-BASE
		S-2	19/24	2-4	12-19-21-14	Dense, gray, fine to coarse GRAVEL FILL, little sand, trace silt; moist. (LAF)		LIGHTWEIGHT AGGREGATE FILL (LAF)
5		S-3	13/24	4-6	15-10-13-15	Medium dense, gray, fine to coarse GRAVEL FILL, little sand, trace silt; moist. (LAF)		
		S-4	3/24	6-8	30-35-54-27	Very dense, gray-brown, fine to coarse SAND FILL, little gravel, little silt; moist.		FILL
		S-5	6/24	8-10	5-6-6-6	Medium dense, brown, fine to coarse SAND FILL, some silt, little gravel; moist.		
10		S-6	4/24	10-12	5-3-2-2 (See note 2)	Medium stiff, brown, SANDY SILT FILL, trace gravel; wet. Mild organic odor.	2	
							3	VOID
15		S-7	0/24	14-16	3-4-3-2	Loose, no recovery. Used 3" O.D. spoon to recover sample.		SAND AND GRAVEL
		S-8	2/24	16-18	2-1-2-3	Material was brown, fine to coarse SAND, some gravel, some silt; wet. Very loose, brown, GRAVEL, little to some sand, trace silt; wet. Poor recovery.	4	
20		S-9	0/24	19-21	3-2-1-1	Very loose, no recovery.	5	
25		S-10	0/24	24-26	13-20-21-19	Dense, no recovery. Gravel in tip of spoon. Used 3" O.D. spoon and 300 lb. hammer to recover sample (Blows 100/12"). Material was SAND and GRAVEL (3" diameter), little gravel, little silt.	6	
30		S-11	7/24	29-31	13-12-47-24	Very dense, gray, SAND, little to some gravel, little clay, trace to little silt; wet.	7	GLACIAL TILL

GRANULAR SOILS BLOWS/FT	DENSITY	COHESIVE SOILS BLOWS/FT	DENSITY
0-4	V. LOOSE	0-2	V. SOFT
4-10	LOOSE	2-4	SOFT
10-30	M. DENSE	4-8	M. STIFF
30-50	DENSE	8-15	STIFF
> 50	V. DENSE	15-30	V. STIFF
		> 30	HARD

NOTES:
1. Asphalt Concrete (AC) pavement includes measurement of 2" binded gravel base observed in hole.
2. Spoon dropped to 13 ft. on last hammer blow indicating possible void or very soft/loose material between 12 - 13ft. (Casing at 10 ft.)
3. Casing acvanced to 12 ft. and washed. SPT and Rod inserted to 14 ft. with no resistance indicating likley void.
4. Lost drill fluid circulation at 18 ft.
5. Casing blow counts increased at 22 ft. likely indicating a change in stratum. Using a mirror to look down casing, cobbles and boulders observed below 20 ft. Lost drill fluid circulation.
6. Lost drill fluid circulation at 24 ft.
7. Sporadic roller bit grinding below 32 ft. indicating presence of cobbles and/or boulders.
* Retaining wall height was approximately 14 ft. +/- in the vicinity of B-2.

GENERAL NOTES: i) THE STRATIFICATION LINES REPRESENT THE APPROXIMATE BOUNDARY BETWEEN SOIL TYPES. TRANSITIONS MAY BE GRADUAL.
ii) WATER LEVEL READINGS HAVE BEEN MADE IN THE DRILL HOLES AT TIMES AND UNDER CONDITIONS STATED ON THIS BORING LOG. FLUCTUATIONS IN THE LEVEL OF GROUNDWATER MAY OCCUR DUE TO OTHER FACTORS THAN THOSE PRESENT AT THE TIME MEASUREMENTS ARE MADE.

BORING No. B-2

\\wse03.local\WSE\Projects\MA\MassDOT\77888 Statewide\Sharon Bridge_S-09-003\Geotechnical\Field\Boring Logs.xlsx\B-2

EL. 189.5
(6/27/16)

BOTTOM OF FOOTING
WEST ABUTMENT
EL. 188.5

BORING BB–2 (CONT.)

STATION: 14+69.05 ±
OFFSET: 7.36' LEFT
GROUND ELEVATION: 213.5

Weston & Sampson

PROJECT	REPORT OF BORING No. B-2
Maskwonicut St. Bridge, MassDOT, Sharon, MA	SHEET 2 OF 2
	Project No. 2150851
	CHKD BY Christopher J. Palmer, PE

BORING Co. New England Boring Contractors
FOREMAN Jason Stokes
WSE ENGINEER: Julie A. Eaton, EIT
BORING LOCATION See attached plan
GROUND SURFACE ELEV. EL. 213.5+/- DATUM NAVD88
DATE START 6/23/16 DATE END 6/27/16

SAMPLER: 2 IN. OD SPLIT SPOON SAMPLER (SPT) DRIVEN 24 INCHES USING A 140 lb. CAT HEAD OPERATED SAFETY HAMMER.
CASING: DRIVEN 4" CASING USING A 300 LB. HAMMER FALLING 30 IN. AND THE DRIVE AND WASH TECHNIQUE
CASING SIZE: 5 IN. INSIDE DIAMETER. OTHER: See note 7.

GROUNDWATER READINGS

DATE	TIME	WATER AT	CASING AT	STABILIZATION TIME
6/27/2016	10:30	24 ft. +/-	27 ft. +/-	1.5 hours

DEPTH (feet)	CASING (blows/ft)	SAMPLE No.	REC/PEN (in)	DEPTH (ft)	BLOWS/6"	SAMPLE DESCRIPTION	NOTES	STRATUM DESCRIPTION
35		S-12	13/24	34-36	29-44-37-54	Very dense, brown, gravelly, fine to coarse SAND, little clay, trace silt; wet.	8	GLACIAL TILL
40		S-13	7/11	39-39.9	78-100/5"	Very dense, brown, fine to coarse SAND, some silt, little to some gravel, trace clay; wet.		
45		S-14	7/11	44-44.9	25-120/5"	Very dense, brown, fine to medium SILTY SAND, little gravel, little clay; wet.		
		C-1	41/48	46-47	6.3 minutes	RQD: 8/48 = 17%. Very poor quality, hard, slightly weathered, intensely fractured, partly healed, large-grained gray DIORITE.	9	BEDROCK
				47-48	6.5 minutes			
				48-49	7.0 minutes			
50				49-50	7.5 minutes			
		C-2	21/21	50-51	7.5 minutes	RQD: 13/21 = 62%. Same as above, becomes fair quality and moderately fractured.		
				51-51.8	8.0 minutes			
		C-3	24/24	51.8-53	11.5 minutes	RQD: 16/24 = 67%. Same as above, becomes mostly healed.		
				53-53.8	7.5 minutes			
55		C-4	27/27	53.8-55	8.4 minutes	RQD: 23/27 = 85%. Same as above, becomes good quality and slightly fractured.		
				55-56	6.0 minutes			
						Core terminated at 56.0 ft.		
60								
65								

GRANULAR SOILS BLOWS/FT	DENSITY	COHESIVE SOILS BLOWS/FT	DENSITY
0-4	V. LOOSE	0-2	V. SOFT
4-10	LOOSE	2-4	SOFT
10-30	M. DENSE	4-8	M. STIFF
30-50	DENSE	8-15	STIFF
> 50	V. DENSE	15-30	V. STIFF
		> 30	HARD

NOTES:
8. 5" casing advanced to 34 ft. then telescoped 4" casing.
9. 4" casing refusal at 46 ft. NX Core sample started at 46 ft. Core barrel jammed frequently and there were sporadic losses of drill fluid.

GENERAL NOTES: i) THE STRATIFICATION LINES REPRESENT THE APPROXIMATE BOUNDARY BETWEEN SOIL TYPES. TRANSITIONS MAY BE GRADUAL.
ii) WATER LEVEL READINGS HAVE BEEN MADE IN THE DRILL HOLES AT TIMES AND UNDER CONDITIONS STATED ON THIS BORING LOG. FLUCTUATIONS IN THE LEVEL OF GROUNDWATER MAY OCCUR DUE TO OTHER FACTORS THAN THOSE PRESENT AT THE TIME MEASUREMENTS ARE MADE.

BORING No. B-2

\\wse03.local\WSE\Projects\MA\MassDOT\77888 Statewide\Sharon Bridge_S-09-003\Geotechnical\Field\Boring Logs.xlsx\B-2

BORING/PROBE NOTES:

1. FOR BORING/PROBE NOTES, SEE SHEET 03.

XXX XX XXXX	ISSUED FOR CONSTRUCTION
DATE	
USE ONLY PRINTS OF LATEST DATE	

SHARON
MASKWONICUT STREET

STATE	FED. AID PROJ. NO.	SHEET NO.	TOTAL SHEETS
MA	-	19	86
PROJECT FILE NO.	608079		

BORINGS SHEETS
3 OF 10

220
215
210
205
200
195
190
185
180
175

PROBE P–1A

STATION: 15+36 ±
OFFSET: 1' LEFT ±
GROUND ELEVATION: 216 ±

Weston & Sampson

PROJECT: Maskwonicut St. Bridge, MassDOT, Sharon, MA

REPORT OF PROBE No. P-1A
SHEET 1 OF 1
Project No. 2150851
CHKD BY Christopher J. Palmer, PE

PROBE Co. New England Boring Contractors
FOREMAN Matt Vanheusen
WSE ENGINEER: Julie A. Eaton, EIT
PROBE LOCATION See attached plan and note 1
GROUND SURFACE ELEV. EL. 216 +/- DATUM NAVD88
DATE START 8/30/16 DATE END 8/30/16

SAMPLER:
CASING: SOLID STEM AUGER (4" OUTER DIAMETER)
CASING SIZE: OTHER:

GROUNDWATER READINGS

DATE	TIME	WATER AT	CASING AT	STABILIZATION TIME
Groundwater not observed.				

DEPTH (feet)	CASING (blows/ft)	SAMPLE No.	REC/PEN (in)	DEPTH (ft)	BLOWS/6"	SAMPLE DESCRIPTION	NOTES	STRATUM DESCRIPTION
0							1,2	
5							3	
10								
15								
20						Auger refusal at 18.5 ft.	4	
25								
30								

GRANULAR SOILS BLOWS/FT	GRANULAR SOILS DENSITY	COHESIVE SOILS BLOWS/FT	COHESIVE SOILS DENSITY
0-4	V. LOOSE	0-2	V. SOFT
4-10	LOOSE	2-4	SOFT
10-30	M. DENSE	4-8	M. STIFF
30-50	DENSE	8-15	STIFF
> 50	V. DENSE	15-30	V. STIFF
		> 30	HARD

NOTES:
1. Probe was located approximately 24" behind east abutment back face of wall.
2. Abutment wall height was approximately 20.0 ft. at probe location.
3. Auger grinding from 9.0 ft. to 18.5 ft.
4. Augers damaged on refusal at 18.5 ft.

GENERAL NOTES: i) THE STRATIFICATION LINES REPRESENT THE APPROXIMATE BOUNDARY BETWEEN SOIL TYPES. TRANSITIONS MAY BE GRADUAL.
ii) WATER LEVEL READINGS HAVE BEEN MADE IN THE DRILL HOLES AT TIMES AND UNDER CONDITIONS STATED ON THIS PROBE LOG. FLUCTUATIONS IN THE LEVEL OF GROUNDWATER MAY OCCUR DUE TO OTHER FACTORS THAN THOSE PRESENT AT THE TIME MEASUREMENTS ARE MADE.

PROBE No. P-1A

\\wse03.local\WSE\Projects\MA\MassDOT\77888 Statewide\Sharon Bridge_S-09-003\Geotechnical\Field\[Boring Logs.xlsx]B-2

PROBE P–1B

STATION: 15+37 ±
OFFSET: 1' LEFT ±
GROUND ELEVATION: 216 ±

Weston & Sampson

PROJECT: Maskwonicut St. Bridge, MassDOT, Sharon, MA

REPORT OF PROBE No. P-1B
SHEET 1 OF 1
Project No. 2150851
CHKD BY Christopher J. Palmer, PE

PROBE Co. New England Boring Contractors
FOREMAN Matt Vanheusen
WSE ENGINEER: Julie A. Eaton, EIT
PROBE LOCATION See attached plan and note 1
GROUND SURFACE ELEV. EL. 216 +/- DATUM NAVD88
DATE START 8/30/16 DATE END 8/30/16

SAMPLER:
CASING: SOLID STEM AUGER (4" OUTER DIAMETER)
CASING SIZE: OTHER:

GROUNDWATER READINGS

DATE	TIME	WATER AT	CASING AT	STABILIZATION TIME
Groundwater not observed.				

DEPTH (feet)	CASING (blows/ft)	SAMPLE No.	REC/PEN (in)	DEPTH (ft)	BLOWS/6"	SAMPLE DESCRIPTION	NOTES	STRATUM DESCRIPTION
0							1,2	
5							3	
10								
15								
20							4	
25						Probe terminated at 25.0 ft.	5	
30								

GRANULAR SOILS BLOWS/FT	GRANULAR SOILS DENSITY	COHESIVE SOILS BLOWS/FT	COHESIVE SOILS DENSITY
0-4	V. LOOSE	0-2	V. SOFT
4-10	LOOSE	2-4	SOFT
10-30	M. DENSE	4-8	M. STIFF
30-50	DENSE	8-15	STIFF
> 50	V. DENSE	15-30	V. STIFF
		> 30	HARD

NOTES:
1. Probe was located approximately 52" behind east abutment back face of wall.
2. Abutment wall height was approximately 20.0 ft. at probe location.
3. Solid stem auger drilling methods to 5.0 ft. Switch to driving rods (probe) using 140 lb. cat head operated hammer.
4. Change noticed in driving from 21.0 ft. to 22.0 ft.
5. Probe terminated at 25.0 ft.

GENERAL NOTES: i) THE STRATIFICATION LINES REPRESENT THE APPROXIMATE BOUNDARY BETWEEN SOIL TYPES. TRANSITIONS MAY BE GRADUAL.
ii) WATER LEVEL READINGS HAVE BEEN MADE IN THE DRILL HOLES AT TIMES AND UNDER CONDITIONS STATED ON THIS PROBE LOG. FLUCTUATIONS IN THE LEVEL OF GROUNDWATER MAY OCCUR DUE TO OTHER FACTORS THAN THOSE PRESENT AT THE TIME MEASUREMENTS ARE MADE.

PROBE No. P-1B

\\wse03.local\WSE\Projects\MA\MassDOT\77888 Statewide\Sharon Bridge_S-09-003\Geotechnical\Field\[Boring Logs.xlsx]B-2

PROBE P–1C

STATION: 15+38 ±
OFFSET: 1' LEFT ±
GROUND ELEVATION: 216 ±

Weston & Sampson

PROJECT: Maskwonicut St. Bridge, MassDOT, Sharon, MA

REPORT OF PROBE No. P-1C
SHEET 1 OF 1
Project No. 2150851
CHKD BY Christopher J. Palmer, PE

PROBE Co. New England Boring Contractors
FOREMAN Matt Vanheusen
WSE ENGINEER: Julie A. Eaton, EIT
PROBE LOCATION See attached plan and note 1
GROUND SURFACE ELEV. EL. 216 +/- DATUM NAVD88
DATE START 8/30/16 DATE END 8/30/16

SAMPLER:
CASING: SOLID STEM AUGER (4" OUTER DIAMETER)
CASING SIZE: OTHER:

GROUNDWATER READINGS

DATE	TIME	WATER AT	CASING AT	STABILIZATION TIME
Groundwater not observed.				

DEPTH (feet)	CASING (blows/ft)	SAMPLE No.	REC/PEN (in)	DEPTH (ft)	BLOWS/6"	SAMPLE DESCRIPTION	NOTES	STRATUM DESCRIPTION
0							1,2	
5							3	
10								
15								
20						Probe refusal at 18.0 ft.	4	
25								
30								

GRANULAR SOILS BLOWS/FT	GRANULAR SOILS DENSITY	COHESIVE SOILS BLOWS/FT	COHESIVE SOILS DENSITY
0-4	V. LOOSE	0-2	V. SOFT
4-10	LOOSE	2-4	SOFT
10-30	M. DENSE	4-8	M. STIFF
30-50	DENSE	8-15	STIFF
> 50	V. DENSE	15-30	V. STIFF
		> 30	HARD

NOTES:
1. Probe was located approximately 32" behind east abutment back face of wall.
2. Abutment wall height was approximately 20.0 ft. at probe location.
3. Solid stem auger drilling methods to 5.0 ft. Switch to driving rods (probe) using 140 lb. cat head operated hammer.
4. Driven rod refusal (50 blows, no penetration) at 18.0 ft.

GENERAL NOTES: i) THE STRATIFICATION LINES REPRESENT THE APPROXIMATE BOUNDARY BETWEEN SOIL TYPES. TRANSITIONS MAY BE GRADUAL.
ii) WATER LEVEL READINGS HAVE BEEN MADE IN THE DRILL HOLES AT TIMES AND UNDER CONDITIONS STATED ON THIS PROBE LOG. FLUCTUATIONS IN THE LEVEL OF GROUNDWATER MAY OCCUR DUE TO OTHER FACTORS THAN THOSE PRESENT AT THE TIME MEASUREMENTS ARE MADE.

PROBE No. P-1C

\\wse03.local\WSE\Projects\MA\MassDOT\77888 Statewide\Sharon Bridge_S-09-003\Geotechnical\Field\[Boring Logs.xlsx]B-2

BORING/PROBE NOTES:

1. FOR BORING/PROBE NOTES, SEE SHEET 03.

xxx xx xxxx	ISSUED FOR CONSTRUCTION
DATE	
USE ONLY PRINTS OF LATEST DATE	

PROBE P–2A

STATION: 15+57 ±
OFFSET: 9' RIGHT ±
GROUND ELEVATION: 217 ±

Weston & Sampson

PROJECT	REPORT OF PROBE No.	P-2A
Maskwonicut St. Bridge, MassDOT, Sharon, MA	SHEET	1 OF 1
	Project No.	2150851
	CHKD BY	Christopher J. Palmer, PE

PROBE Co. New England Boring Contractors
FOREMAN Matt Vanheusen
WSE ENGINEER: Julie A. Eaton, EIT
PROBE LOCATION See attached plan and note 1
GROUND SURFACE ELEV. EL. 217+/- DATUM NAVD88
DATE START 8/30/16 DATE END 8/30/16
SAMPLER:
CASING: SOLID STEM AUGER (4" OUTER DIAMETER).
CASING SIZE: OTHER:

GROUNDWATER READINGS

DATE	TIME	WATER AT	CASING AT	STABILIZATION TIME
Groundwater not observed.				

DEPTH (feet)	CASING (blows/ft)	SAMPLE No.	REC/PEN (in)	DEPTH (ft)	BLOWS/6"	SAMPLE DESCRIPTION	NOTES	STRATUM DESCRIPTION
0						Auger refusal at 2.5 ft.	1	
5								
10								
15								
20								

GRANULAR SOILS BLOWS/FT	DENSITY	COHESIVE SOILS BLOWS/FT	DENSITY
0-4	V. LOOSE	0-2	V. SOFT
4-10	LOOSE	2-4	SOFT
10-30	M. DENSE	4-8	M. STIFF
30-50	DENSE	8-15	STIFF
> 50	V. DENSE	15-30	V. STIFF
		> 30	HARD

NOTES:
1. Probe was located approximately 36" from south edge of pavement and approximately 4.0 ft. east of chain link security fence.
2. Abutment wall height was approximately 7.0 ft. at probe location.

GENERAL NOTES: i) THE STRATIFICATION LINES REPRESENT THE APPROXIMATE BOUNDARY BETWEEN SOIL TYPES. TRANSITIONS MAY BE GRADUAL.
ii) WATER LEVEL READINGS HAVE BEEN MADE IN THE DRILL HOLES AT TIMES AND UNDER CONDITIONS STATED ON THIS PROBE LOG. FLUCTUATIONS IN THE LEVEL OF GROUNDWATER MAY OCCUR DUE TO OTHER FACTORS THAN THOSE PRESENT AT THE TIME MEASUREMENTS ARE MADE.

PROBE No. P-2A

\\wse03.local\WSE\Projects\MA\MassDOT\77888 Statewide\Sharon Bridge_S-09-003\Geotechnical\Field\[Boring Logs.xlsx]B-2

PROBE P–2B

STATION: 15+57 ±
OFFSET: 8' RIGHT ±
GROUND ELEVATION: 217 ±

Weston & Sampson

PROJECT	REPORT OF PROBE No.	P-2B
Maskwonicut St. Bridge, MassDOT, Sharon, MA	SHEET	1 OF 1
	Project No.	2150851
	CHKD BY	Christopher J. Palmer, PE

PROBE Co. New England Boring Contractors
FOREMAN Matt Vanheusen
WSE ENGINEER: Julie A. Eaton, EIT
PROBE LOCATION See attached plan and note 1
GROUND SURFACE ELEV. EL. 217+/- DATUM NAVD88
DATE START 8/30/16 DATE END 8/30/16
SAMPLER:
CASING: SOLID STEM AUGER (4" OUTER DIAMETER).
CASING SIZE: OTHER:

GROUNDWATER READINGS

DATE	TIME	WATER AT	CASING AT	STABILIZATION TIME
Groundwater not observed.				

DEPTH (feet)	CASING (blows/ft)	SAMPLE No.	REC/PEN (in)	DEPTH (ft)	BLOWS/6"	SAMPLE DESCRIPTION	NOTES	STRATUM DESCRIPTION
0						Auger refusal at 3.2 ft.	1	
5								
10								
15								
20								

GRANULAR SOILS BLOWS/FT	DENSITY	COHESIVE SOILS BLOWS/FT	DENSITY
0-4	V. LOOSE	0-2	V. SOFT
4-10	LOOSE	2-4	SOFT
10-30	M. DENSE	4-8	M. STIFF
30-50	DENSE	8-15	STIFF
> 50	V. DENSE	15-30	V. STIFF
		> 30	HARD

NOTES:
1. Probe was located approximately 51" from south edge of pavement and approximately 4.0 ft. east of chain link security fence.
2. Abutment wall height was approximately 7.0 ft. at probe location.

GENERAL NOTES: i) THE STRATIFICATION LINES REPRESENT THE APPROXIMATE BOUNDARY BETWEEN SOIL TYPES. TRANSITIONS MAY BE GRADUAL.
ii) WATER LEVEL READINGS HAVE BEEN MADE IN THE DRILL HOLES AT TIMES AND UNDER CONDITIONS STATED ON THIS PROBE LOG. FLUCTUATIONS IN THE LEVEL OF GROUNDWATER MAY OCCUR DUE TO OTHER FACTORS THAN THOSE PRESENT AT THE TIME MEASUREMENTS ARE MADE.

PROBE No. P-2B

\\wse03.local\WSE\Projects\MA\MassDOT\77888 Statewide\Sharon Bridge_S-09-003\Geotechnical\Field\[Boring Logs.xlsx]B-2

PROBE P–2C

STATION: 15+57 ±
OFFSET: 6' RIGHT ±
GROUND ELEVATION: 217 ±

Weston & Sampson

PROJECT	REPORT OF PROBE No.	P-2C
Maskwonicut St. Bridge, MassDOT, Sharon, MA	SHEET	1 OF 1
	Project No.	2150851
	CHKD BY	Christopher J. Palmer, PE

PROBE Co. New England Boring Contractors
FOREMAN Matt Vanheusen
WSE ENGINEER: Julie A. Eaton, EIT
PROBE LOCATION See attached plan and note 1
GROUND SURFACE ELEV. EL. 217+/- DATUM NAVD88
DATE START 8/30/16 DATE END 8/30/16
SAMPLER:
CASING: SOLID STEM AUGER (4" OUTER DIAMETER).
CASING SIZE: OTHER:

GROUNDWATER READINGS

DATE	TIME	WATER AT	CASING AT	STABILIZATION TIME
Groundwater not observed.				

DEPTH (feet)	CASING (blows/ft)	SAMPLE No.	REC/PEN (in)	DEPTH (ft)	BLOWS/6"	SAMPLE DESCRIPTION	NOTES	STRATUM DESCRIPTION
0							1	
5							2 3	
10								
15								
20						Probe terminated at 18.0 ft.		

GRANULAR SOILS BLOWS/FT	DENSITY	COHESIVE SOILS BLOW S/FT	DENSITY
0-4	V. LOOSE	0-2	V. SOFT
4-10	LOOSE	2-4	SOFT
10-30	M. DENSE	4-8	M. STIFF
30-50	DENSE	8-15	STIFF
> 50	V. DENSE	15-30	V. STIFF
		> 30	HARD

NOTES:
1. Probe was located approximately 68" from south edge of pavement and approximately 4.0 ft. east of chain link security fence.
2. Solid stem auger refusal at 3.0 ft. Switched to driving rods (probe) with 140 lb. cat head operated hammer.
3. Rods were observed to be tilting towards center of roadway.
4. Abutment wall height was approximately 7.0 ft. at probe location.

GENERAL NOTES: i) THE STRATIFICATION LINES REPRESENT THE APPROXIMATE BOUNDARY BETWEEN SOIL TYPES. TRANSITIONS MAY BE GRADUAL.
ii) WATER LEVEL READINGS HAVE BEEN MADE IN THE DRILL HOLES AT TIMES AND UNDER CONDITIONS STATED ON THIS PROBE LOG. FLUCTUATIONS IN THE LEVEL OF GROUNDWATER MAY OCCUR DUE TO OTHER FACTORS THAN THOSE PRESENT AT THE TIME MEASUREMENTS ARE MADE.

PROBE No. P-2C

\\wse03.local\WSE\Projects\MA\MassDOT\77888 Statewide\Sharon Bridge_S-09-003\Geotechnical\Field\[Boring Logs.xlsx]B-2

PROBE P–2D

STATION: 15+57 ±
OFFSET: 5' RIGHT ±
GROUND ELEVATION: 217 ±

Weston & Sampson

PROJECT	REPORT OF PROBE No.	P-2D
Maskwonicut St. Bridge, MassDOT, Sharon, MA	SHEET	1 OF 1
	Project No.	2150851
	CHKD BY	Christopher J. Palmer, PE

PROBE Co. New England Boring Contractors
FOREMAN Matt Vanheusen
WSE ENGINEER: Julie A. Eaton, EIT
PROBE LOCATION See attached plan and note 1
GROUND SURFACE ELEV. EL. 217+/- DATUM NAVD88
DATE START 8/30/16 DATE END 8/30/16
SAMPLER:
CASING: SOLID STEM AUGER (4" OUTER DIAMETER).
CASING SIZE: OTHER:

GROUNDWATER READINGS

DATE	TIME	WATER AT	CASING AT	STABILIZATION TIME
Groundwater not observed.				

DEPTH (feet)	CASING (blows/ft)	SAMPLE No.	REC/PEN (in)	DEPTH (ft)	BLOWS/6"	SAMPLE DESCRIPTION	NOTES	STRATUM DESCRIPTION
0							1	
5							2	
10								
15								
20						Probe terminated at 18.0 ft.		

GRANULAR SOILS BLOWS/FT	DENSITY	COHESIVE SOILS BLOWS/FT	DENSITY
0-4	V. LOOSE	0-2	V. SOFT
4-10	LOOSE	2-4	SOFT
10-30	M. DENSE	4-8	M. STIFF
30-50	DENSE	8-15	STIFF
> 50	V. DENSE	15-30	V. STIFF
		> 30	HARD

NOTES:
1. Probe was located approximately 79" from south edge of pavement and approximately 4.0 ft. east of chain link security fence.
2. Solid stem auger drilling methods to 5.0 ft. Switched to driving rods (probe) with 140 lb. cat head operated hammer.
4. Abutment wall height was approximately 7.0 ft. at probe location.

GENERAL NOTES: i) THE STRATIFICATION LINES REPRESENT THE APPROXIMATE BOUNDARY BETWEEN SOIL TYPES. TRANSITIONS MAY BE GRADUAL.
ii) WATER LEVEL READINGS HAVE BEEN MADE IN THE DRILL HOLES AT TIMES AND UNDER CONDITIONS STATED ON THIS PROBE LOG. FLUCTUATIONS IN THE LEVEL OF GROUNDWATER MAY OCCUR DUE TO OTHER FACTORS THAN THOSE PRESENT AT THE TIME MEASUREMENTS ARE MADE.

PROBE No. P-2D

\\wse03.local\WSE\Projects\MA\MassDOT\77888 Statewide\Sharon Bridge_S-09-003\Geotechnical\Field\[Boring Logs.xlsx]B-2

BORING/PROBE NOTES:

1. FOR BORING/PROBE NOTES, SEE SHEET 03.

XXX XX XXXX	ISSUED FOR CONSTRUCTION
DATE	
USE ONLY PRINTS OF LATEST DATE	

SHARON
MASKWONICUT STREET

STATE	FED. AID PROJ. NO.	SHEET NO.	TOTAL SHEETS
MA	-	21	86
PROJECT FILE NO.	608079		

BORING LOGS
SHEET 5 OF 10

220
215
210
205
200
195
190
185
180
175

PROBE P–3A

STATION: 15+61 ±
OFFSET: 12' LEFT ±
GROUND ELEVATION: 217 ±

Weston & Sampson

PROJECT: Maskwonicut St. Bridge, MassDOT, Sharon, MA

REPORT OF PROBE No. P-3A
SHEET 1 OF 1
Project No. 2150851
CHKD BY Christopher J. Palmer, PE

PROBE Co. New England Boring Contractors
FOREMAN Matt Vanheusen
WSE ENGINEER: Julie A. Eaton, EIT
PROBE LOCATION See attached plan and note 1
GROUND SURFACE ELEV. EL. 217+/- DATUM NAVD88
DATE START 8/30/16 DATE END 8/30/16

SAMPLER:
CASING: SOLID STEM AUGER (4" OUTER DIAMETER).
CASING SIZE: OTHER:

GROUNDWATER READINGS

DATE	TIME	WATER AT	CASING AT	STABILIZATION TIME
Groundwater not observed.				

DEPTH (feet)	CASING (blows/ft)	SAMPLE No.	REC/PEN (in)	DEPTH (ft)	BLOWS/6"	SAMPLE DESCRIPTION	NOTES	STRATUM DESCRIPTION
0							1	
5							2,3	
						Probe refusal at 7.2 ft.		
10								
15								
20								
25								
30								

GRANULAR SOILS BLOWS/FT	GRANULAR SOILS DENSITY	COHESIVE SOILS BLOWS/FT	COHESIVE SOILS DENSITY
0-4	V. LOOSE	0-2	V. SOFT
4-10	LOOSE	2-4	SOFT
10-30	M. DENSE	4-8	M. STIFF
30-50	DENSE	8-15	STIFF
> 50	V. DENSE	15-30	V. STIFF
		> 30	HARD

NOTES:
1. Probe was located approximately 40" from north edge of pavement and approximately 6.5 ft. east of chain link security fence.
2. Solid stem auger drilling methods to 5.0 ft. Switch to driving rods (probe) using 140 lb. cat head operated hammer.
3. Rods were observed to be tilting towards center of roadway.
4. Abutment wall height was approximately 4.0 ft. at probe location.

GENERAL NOTES: i) THE STRATIFICATION LINES REPRESENT THE APPROXIMATE BOUNDARY BETWEEN SOIL TYPES. TRANSITIONS MAY BE GRADUAL.
ii) WATER LEVEL READINGS HAVE BEEN MADE IN THE DRILL HOLES AT TIMES AND UNDER CONDITIONS STATED ON THIS PROBE LOG. FLUCTUATIONS IN THE LEVEL OF GROUNDWATER MAY OCCUR DUE TO OTHER FACTORS THAN THOSE PRESENT AT THE TIME MEASUREMENTS ARE MADE.

PROBE No. P-3A

\\wsa03.local\WSE\Projects\MA\MassDOT\77888 Statewide\Sharon Bridge_S-09-003\Geotechnical\Final\[Boring Logs.xlsx]B-2

PROBE P–3B

STATION: 15+61 ±
OFFSET: 11' LEFT ±
GROUND ELEVATION: 217 ±

Weston & Sampson

PROJECT: Maskwonicut St. Bridge, MassDOT, Sharon, MA

REPORT OF PROBE No. P-3B
SHEET 1 OF 1
Project No. 2150851
CHKD BY Christopher J. Palmer, PE

PROBE Co. New England Boring Contractors
FOREMAN Matt Vanheusen
WSE ENGINEER: Julie A. Eaton, EIT
PROBE LOCATION See attached plan and note 1
GROUND SURFACE ELEV. EL. 217+/- DATUM NAVD88
DATE START 8/30/16 DATE END 8/30/16

SAMPLER:
CASING: SOLID STEM AUGER (4" OUTER DIAMETER).
CASING SIZE: OTHER:

GROUNDWATER READINGS

DATE	TIME	WATER AT	CASING AT	STABILIZATION TIME
Groundwater not observed.				

DEPTH (feet)	CASING (blows/ft)	SAMPLE No.	REC/PEN (in)	DEPTH (ft)	BLOWS/6"	SAMPLE DESCRIPTION	NOTES	STRATUM DESCRIPTION
0							1	
						Auger refusal at 3.2 ft.		
5								
10								
15								
20								
25								
30								

GRANULAR SOILS BLOWS/FT	GRANULAR SOILS DENSITY	COHESIVE SOILS BLOWS/FT	COHESIVE SOILS DENSITY
0-4	V. LOOSE	0-2	V. SOFT
4-10	LOOSE	2-4	SOFT
10-30	M. DENSE	4-8	M. STIFF
30-50	DENSE	8-15	STIFF
> 50	V. DENSE	15-30	V. STIFF
		> 30	HARD

NOTES:
1. Probe was located approximately 40" from north edge of pavement and approximately 6.5 ft. east of chain link security fence.
2. Abutment wall height was approximately 4.0 ft. at probe location.

GENERAL NOTES: i) THE STRATIFICATION LINES REPRESENT THE APPROXIMATE BOUNDARY BETWEEN SOIL TYPES. TRANSITIONS MAY BE GRADUAL.
ii) WATER LEVEL READINGS HAVE BEEN MADE IN THE DRILL HOLES AT TIMES AND UNDER CONDITIONS STATED ON THIS PROBE LOG. FLUCTUATIONS IN THE LEVEL OF GROUNDWATER MAY OCCUR DUE TO OTHER FACTORS THAN THOSE PRESENT AT THE TIME MEASUREMENTS ARE MADE.

PROBE No. P-3B

\\wsa03.local\WSE\Projects\MA\MassDOT\77888 Statewide\Sharon Bridge_S-09-003\Geotechnical\Final\[Boring Logs.xlsx]B-2

PROBE P–3C

STATION: 15+61 ±
OFFSET: 10' LEFT ±
GROUND ELEVATION: 217 ±

Weston & Sampson

PROJECT: Maskwonicut St. Bridge, MassDOT, Sharon, MA

REPORT OF PROBE No. P-3C
SHEET 1 OF 1
Project No. 2150851
CHKD BY Christopher J. Palmer, PE

PROBE Co. New England Boring Contractors
FOREMAN Matt Vanheusen
WSE ENGINEER: Julie A. Eaton, EIT
PROBE LOCATION See attached plan and note 1
GROUND SURFACE ELEV. EL. 217+/- DATUM NAVD88
DATE START 8/30/16 DATE END 8/30/16

SAMPLER:
CASING: SOLID STEM AUGER (4" OUTER DIAMETER).
CASING SIZE: OTHER:

GROUNDWATER READINGS

DATE	TIME	WATER AT	CASING AT	STABILIZATION TIME
Groundwater not observed.				

DEPTH (feet)	CASING (blows/ft)	SAMPLE No.	REC/PEN (in)	DEPTH (ft)	BLOWS/6"	SAMPLE DESCRIPTION	NOTES	STRATUM DESCRIPTION
0							1	
5							2	
10								
15						Probe terminated at 16.0 ft.		
20								
25								
30								

GRANULAR SOILS BLOWS/FT	GRANULAR SOILS DENSITY	COHESIVE SOILS BLOWS/FT	COHESIVE SOILS DENSITY
0-4	V. LOOSE	0-2	V. SOFT
4-10	LOOSE	2-4	SOFT
10-30	M. DENSE	4-8	M. STIFF
30-50	DENSE	8-15	STIFF
> 50	V. DENSE	15-30	V. STIFF
		> 30	HARD

NOTES:
1. Probe was located approximately 54" from north edge of pavement and approximately 6.5 ft. east of chain link security fence.
2. Solid stem auger drilling methods to 5.0 ft. Switch to driving rods (probe) using 140 lb. cat head operated hammer.
3. Abutment wall height was approximately 4.0 ft. at probe location.

GENERAL NOTES: i) THE STRATIFICATION LINES REPRESENT THE APPROXIMATE BOUNDARY BETWEEN SOIL TYPES. TRANSITIONS MAY BE GRADUAL.
ii) WATER LEVEL READINGS HAVE BEEN MADE IN THE DRILL HOLES AT TIMES AND UNDER CONDITIONS STATED ON THIS PROBE LOG. FLUCTUATIONS IN THE LEVEL OF GROUNDWATER MAY OCCUR DUE TO OTHER FACTORS THAN THOSE PRESENT AT THE TIME MEASUREMENTS ARE MADE.

PROBE No. P-3C

\\wsa03.local\WSE\Projects\MA\MassDOT\77888 Statewide\Sharon Bridge_S-09-003\Geotechnical\Final\[Boring Logs.xlsx]B-2

BORING/PROBE NOTES:

1. FOR BORING/PROBE NOTES, SEE SHEET 03.

xxx xx xxxx	ISSUED FOR CONSTRUCTION
DATE	
USE ONLY PRINTS OF LATEST DATE	

SHARON
MASKWONICUT STREET

STATE	FED. AID PROJ. NO.	SHEET NO.	TOTAL SHEETS
MA	-	22	86
PROJECT FILE NO.	608079		

BORING LOGS
SHEET 6 OF 10

220
215
210
205
200

PROBE P–4A

STATION: 14+98 ±
OFFSET: 2' LEFT ±
GROUND ELEVATION: 215 ±

Weston & Sampson

PROJECT	Maskwonicut St. Bridge, MassDOT, Sharon, MA	REPORT OF PROBE No.	P-4A
		SHEET	1 OF 1
		Project No.	2150851
		CHKD BY	Christopher J. Palmer, PE

PROBE Co.	New England Boring Contractors	PROBE LOCATION	See attached plan and note 1
FOREMAN	Matt Vanheusen	GROUND SURFACE ELEV.	EL. 215 +/- DATUM NAVD88
WSE ENGINEER:	Julie A. Eaton, EIT	DATE START 8/31/16	DATE END 8/31/16

SAMPLER:
CASING: SOLID STEM AUGER (4" OUTER DIAMETER).
CASING SIZE: OTHER:

GROUNDWATER READINGS				
DATE	TIME	WATER AT	CASING AT	STABILIZATION TIME
Groundwater not observed.				

DEPTH (feet)	CASING (blows/ft)	SAMPLE No.	REC/PEN (in)	DEPTH (ft)	BLOWS/6"	SAMPLE DESCRIPTION	NOTES	STRATUM DESCRIPTION
0							1,2	
5						Auger refusal 4.2 ft.		
10								

GRANULAR SOILS BLOWS/FT	GRANULAR SOILS DENSITY	COHESIVE SOILS BLOWS/FT	COHESIVE SOILS DENSITY
0-4	V. LOOSE	0-2	V. SOFT
4-10	LOOSE	2-4	SOFT
10-30	M. DENSE	4-8	M. STIFF
30-50	DENSE	8-15	STIFF
> 50	V. DENSE	15-30	V. STIFF
		> 30	HARD

NOTES:
1. Probe was located approximately 6" behind west abutment back face of wall.
2. Abutment wall height was approximately 19.0 ft. at probe location.

GENERAL NOTES: i) THE STRATIFICATION LINES REPRESENT THE APPROXIMATE BOUNDARY BETWEEN SOIL TYPES. TRANSITIONS MAY BE GRADUAL.
ii) WATER LEVEL READINGS HAVE BEEN MADE IN THE DRILL HOLES AT TIMES AND UNDER CONDITIONS STATED ON THIS PROBE LOG. FLUCTUATIONS IN THE LEVEL OF GROUNDWATER MAY OCCUR DUE TO OTHER FACTORS THAN THOSE PRESENT AT THE TIME MEASUREMENTS ARE MADE.

PROBE No. P-4A

\\wse03.local\WSE\Projects\MA\MassDOT\77888 Statewide\Sharon Bridge_S-09-003\Geotechnical\Field\[Boring Logs.xlsx]B-2

PROBE P–4B

STATION: 14+97 ±
OFFSET: 2' LEFT ±
GROUND ELEVATION: 215 ±

Weston & Sampson

PROJECT	Maskwonicut St. Bridge, MassDOT, Sharon, MA	REPORT OF PROBE No.	P-4B
		SHEET	1 OF 1
		Project No.	2150851
		CHKD BY	Christopher J. Palmer, PE

PROBE Co.	New England Boring Contractors	PROBE LOCATION	See attached plan and note 1
FOREMAN	Matt Vanheusen	GROUND SURFACE ELEV.	EL. 215 +/- DATUM NAVD88
WSE ENGINEER:	Julie A. Eaton, EIT	DATE START 8/31/16	DATE END 8/31/16

SAMPLER:
CASING: SOLID STEM AUGER (4" OUTER DIAMETER).
CASING SIZE: OTHER:

GROUNDWATER READINGS				
DATE	TIME	WATER AT	CASING AT	STABILIZATION TIME
Groundwater not observed.				

DEPTH (feet)	CASING (blows/ft)	SAMPLE No.	REC/PEN (in)	DEPTH (ft)	BLOWS/6"	SAMPLE DESCRIPTION	NOTES	STRATUM DESCRIPTION
0							1,2	
5							3,4	
10						Auger refusal at 7.4 ft.		

GRANULAR SOILS BLOWS/FT	GRANULAR SOILS DENSITY	COHESIVE SOILS BLOWS/FT	COHESIVE SOILS DENSITY
0-4	V. LOOSE	0-2	V. SOFT
4-10	LOOSE	2-4	SOFT
10-30	M. DENSE	4-8	M. STIFF
30-50	DENSE	8-15	STIFF
> 50	V. DENSE	15-30	V. STIFF
		> 30	HARD

NOTES:
1. Probe was located approximately 21" behind west abutment back face of wall.
2. Abutment wall height was approximately 19.0 ft. at probe location.
3. Auger was observed to be tilting towards chain link security fence below 5.0 ft.
4. Auger grinding was observed from 5.0 ft. to refusal at 7.4 ft.

GENERAL NOTES: i) THE STRATIFICATION LINES REPRESENT THE APPROXIMATE BOUNDARY BETWEEN SOIL TYPES. TRANSITIONS MAY BE GRADUAL.
ii) WATER LEVEL READINGS HAVE BEEN MADE IN THE DRILL HOLES AT TIMES AND UNDER CONDITIONS STATED ON THIS PROBE LOG. FLUCTUATIONS IN THE LEVEL OF GROUNDWATER MAY OCCUR DUE TO OTHER FACTORS THAN THOSE PRESENT AT THE TIME MEASUREMENTS ARE MADE.

PROBE No. P-4B

\\wse03.local\WSE\Projects\MA\MassDOT\77888 Statewide\Sharon Bridge_S-09-003\Geotechnical\Field\[Boring Logs.xlsx]B-2

PROBE P–4C

STATION: 14+96 ±
OFFSET: 2' LEFT ±
GROUND ELEVATION: 215 ±

Weston & Sampson

PROJECT	Maskwonicut St. Bridge, MassDOT, Sharon, MA	REPORT OF PROBE No.	P-4C
		SHEET	1 OF 1
		Project No.	2150851
		CHKD BY	Christopher J. Palmer, PE

PROBE Co.	New England Boring Contractors	PROBE LOCATION	See attached plan and note 1
FOREMAN	Matt Vanheusen	GROUND SURFACE ELEV.	EL. 215 +/- DATUM NAVD88
WSE ENGINEER:	Julie A. Eaton, EIT	DATE START 8/31/16	DATE END 8/31/16

SAMPLER:
CASING: SOLID STEM AUGER (4" OUTER DIAMETER).
CASING SIZE: OTHER:

GROUNDWATER READINGS				
DATE	TIME	WATER AT	CASING AT	STABILIZATION TIME
Groundwater not observed.				

DEPTH (feet)	CASING (blows/ft)	SAMPLE No.	REC/PEN (in)	DEPTH (ft)	BLOWS/6"	SAMPLE DESCRIPTION	NOTES	STRATUM DESCRIPTION
0							1,2	
5							3	
10						Auger refusal at 7.4 ft.		

GRANULAR SOILS BLOWS/FT	GRANULAR SOILS DENSITY	COHESIVE SOILS BLOWS/FT	COHESIVE SOILS DENSITY
0-4	V. LOOSE	0-2	V. SOFT
4-10	LOOSE	2-4	SOFT
10-30	M. DENSE	4-8	M. STIFF
30-50	DENSE	8-15	STIFF
> 50	V. DENSE	15-30	V. STIFF
		> 30	HARD

NOTES:
1. Probe was located approximately 30" behind west abutment back face of wall.
2. Abutment wall height was approximately 19.0 ft. at probe location.
3. Auger grinding was observed from 7.0 ft. to refusal at 7.4 ft.

GENERAL NOTES: i) THE STRATIFICATION LINES REPRESENT THE APPROXIMATE BOUNDARY BETWEEN SOIL TYPES. TRANSITIONS MAY BE GRADUAL.
ii) WATER LEVEL READINGS HAVE BEEN MADE IN THE DRILL HOLES AT TIMES AND UNDER CONDITIONS STATED ON THIS PROBE LOG. FLUCTUATIONS IN THE LEVEL OF GROUNDWATER MAY OCCUR DUE TO OTHER FACTORS THAN THOSE PRESENT AT THE TIME MEASUREMENTS ARE MADE.

PROBE No. P-4C

\\wse03.local\WSE\Projects\MA\MassDOT\77888 Statewide\Sharon Bridge_S-09-003\Geotechnical\Field\[Boring Logs.xlsx]B-2

220
215
210
205
200
195
190

PROBE P–4D

STATION: 14+94 ±
OFFSET: 2' LEFT ±
GROUND ELEVATION: 215 ±

Weston & Sampson

PROJECT	Maskwonicut St. Bridge, MassDOT, Sharon, MA	REPORT OF PROBE No.	P-4D
		SHEET	1 OF 1
		Project No.	2150851
		CHKD BY	Christopher J. Palmer, PE

PROBE Co.	New England Boring Contractors	PROBE LOCATION	See attached plan and note 1
FOREMAN	Matt Vanheusen	GROUND SURFACE ELEV.	EL. 215 +/- DATUM NAVD88
WSE ENGINEER:	Julie A. Eaton, EIT	DATE START 8/31/16	DATE END 8/31/16

SAMPLER:
CASING: SOLID STEM AUGER (4" OUTER DIAMETER).
CASING SIZE: OTHER:

GROUNDWATER READINGS				
DATE	TIME	WATER AT	CASING AT	STABILIZATION TIME
Groundwater not observed.				

DEPTH (feet)	CASING (blows/ft)	SAMPLE No.	REC/PEN (in)	DEPTH (ft)	BLOWS/6"	SAMPLE DESCRIPTION	NOTES	STRATUM DESCRIPTION
0							1,2	
5							3	
10						Auger refusal at 7.2 ft.		
15								
20								

GRANULAR SOILS BLOWS/FT	GRANULAR SOILS DENSITY	COHESIVE SOILS BLOWS/FT	COHESIVE SOILS DENSITY
0-4	V. LOOSE	0-2	V. SOFT
4-10	LOOSE	2-4	SOFT
10-30	M. DENSE	4-8	M. STIFF
30-50	DENSE	8-15	STIFF
> 50	V. DENSE	15-30	V. STIFF
		> 30	HARD

NOTES:
1. Probe was located approximately 45" behind west abutment back face of wall.
2. Abutment wall height was approximately 19.0 ft. at probe location.
3. Auger grinding was observed from 7.0 ft. to refusal at 7.2 ft.

GENERAL NOTES: i) THE STRATIFICATION LINES REPRESENT THE APPROXIMATE BOUNDARY BETWEEN SOIL TYPES. TRANSITIONS MAY BE GRADUAL.
ii) WATER LEVEL READINGS HAVE BEEN MADE IN THE DRILL HOLES AT TIMES AND UNDER CONDITIONS STATED ON THIS PROBE LOG. FLUCTUATIONS IN THE LEVEL OF GROUNDWATER MAY OCCUR DUE TO OTHER FACTORS THAN THOSE PRESENT AT THE TIME MEASUREMENTS ARE MADE.

PROBE No. P-4D

\\wse03.local\WSE\Projects\MA\MassDOT\77888 Statewide\Sharon Bridge_S-09-003\Geotechnical\Field\[Boring Logs.xlsx]B-2

PROBE P–4E

STATION: 14+93 ±
OFFSET: 2' LEFT ±
GROUND ELEVATION: 215 ±

Weston & Sampson

PROJECT	Maskwonicut St. Bridge, MassDOT, Sharon, MA	REPORT OF PROBE No.	P-4E
		SHEET	1 OF 1
		Project No.	2150851
		CHKD BY	Christopher J. Palmer, PE

PROBE Co.	New England Boring Contractors	PROBE LOCATION	See attached plan and note 1
FOREMAN	Matt Vanheusen	GROUND SURFACE ELEV.	EL. 215 +/- DATUM NAVD88
WSE ENGINEER:	Julie A. Eaton, EIT	DATE START 8/31/16	DATE END 8/31/16

SAMPLER:
CASING: SOLID STEM AUGER (4" OUTER DIAMETER).
CASING SIZE: OTHER:

GROUNDWATER READINGS				
DATE	TIME	WATER AT	CASING AT	STABILIZATION TIME
Groundwater not observed.				

DEPTH (feet)	CASING (blows/ft)	SAMPLE No.	REC/PEN (in)	DEPTH (ft)	BLOWS/6"	SAMPLE DESCRIPTION	NOTES	STRATUM DESCRIPTION
0							1,2	
5							3	
10						Auger refusal at 11.9 ft.		
15								
20								

GRANULAR SOILS BLOWS/FT	GRANULAR SOILS DENSITY	COHESIVE SOILS BLOWS/FT	COHESIVE SOILS DENSITY
0-4	V. LOOSE	0-2	V. SOFT
4-10	LOOSE	2-4	SOFT
10-30	M. DENSE	4-8	M. STIFF
30-50	DENSE	8-15	STIFF
> 50	V. DENSE	15-30	V. STIFF
		> 30	HARD

NOTES:
1. Probe was located approximately 59" behind west abutment back face of wall.
2. Abutment wall height was approximately 19.0 ft. at probe location.
3. Auger grinding was observed from 11 ft. to refusal at 11.9 ft.

GENERAL NOTES: i) THE STRATIFICATION LINES REPRESENT THE APPROXIMATE BOUNDARY BETWEEN SOIL TYPES. TRANSITIONS MAY BE GRADUAL.
ii) WATER LEVEL READINGS HAVE BEEN MADE IN THE DRILL HOLES AT TIMES AND UNDER CONDITIONS STATED ON THIS PROBE LOG. FLUCTUATIONS IN THE LEVEL OF GROUNDWATER MAY OCCUR DUE TO OTHER FACTORS THAN THOSE PRESENT AT THE TIME MEASUREMENTS ARE MADE.

PROBE No. P-4E

\\wse03.local\WSE\Projects\MA\MassDOT\77888 Statewide\Sharon Bridge_S-09-003\Geotechnical\Field\[Boring Logs.xlsx]B-2

PROBE P–4F

STATION: 14+92 ±
OFFSET: 2' LEFT ±
GROUND ELEVATION: 215 ±

Weston & Sampson

PROJECT	Maskwonicut St. Bridge, MassDOT, Sharon, MA	REPORT OF PROBE No.	P-4F
		SHEET	1 OF 1
		Project No.	2150851
		CHKD BY	Christopher J. Palmer, PE

PROBE Co.	New England Boring Contractors	PROBE LOCATION	See attached plan and note 1
FOREMAN	Matt Vanheusen	GROUND SURFACE ELEV.	EL. 215 +/- DATUM NAVD88
WSE ENGINEER:	Julie A. Eaton, EIT	DATE START 8/31/16	DATE END 8/31/16

SAMPLER:
CASING: SOLID STEM AUGER (4" OUTER DIAMETER).
CASING SIZE: OTHER:

GROUNDWATER READINGS				
DATE	TIME	WATER AT	CASING AT	STABILIZATION TIME
Groundwater not observed.				

DEPTH (feet)	CASING (blows/ft)	SAMPLE No.	REC/PEN (in)	DEPTH (ft)	BLOWS/6"	SAMPLE DESCRIPTION	NOTES	STRATUM DESCRIPTION
0							1,2	
5								
10								
15						Auger refusal at 16.0 ft.		
20								

GRANULAR SOILS BLOWS/FT	GRANULAR SOILS DENSITY	COHESIVE SOILS BLOWS/FT	COHESIVE SOILS DENSITY
0-4	V. LOOSE	0-2	V. SOFT
4-10	LOOSE	2-4	SOFT
10-30	M. DENSE	4-8	M. STIFF
30-50	DENSE	8-15	STIFF
> 50	V. DENSE	15-30	V. STIFF
		> 30	HARD

NOTES:
1. Probe was located approximately 73" behind west abutment back face of wall.
2. Abutment wall height was approximately 19.0 ft. at probe location.

GENERAL NOTES: i) THE STRATIFICATION LINES REPRESENT THE APPROXIMATE BOUNDARY BETWEEN SOIL TYPES. TRANSITIONS MAY BE GRADUAL.
ii) WATER LEVEL READINGS HAVE BEEN MADE IN THE DRILL HOLES AT TIMES AND UNDER CONDITIONS STATED ON THIS PROBE LOG. FLUCTUATIONS IN THE LEVEL OF GROUNDWATER MAY OCCUR DUE TO OTHER FACTORS THAN THOSE PRESENT AT THE TIME MEASUREMENTS ARE MADE.

PROBE No. P-4F

\\wse03.local\WSE\Projects\MA\MassDOT\77888 Statewide\Sharon Bridge_S-09-003\Geotechnical\Field\[Boring Logs.xlsx]B-2

BORING/PROBE NOTES:

1. FOR BORING/PROBE NOTES, SEE SHEET 03.

XXX XX XXXX	ISSUED FOR CONSTRUCTION
DATE	
USE ONLY PRINTS OF LATEST DATE	

PROBE P-4G

STATION: 14+91 ±
OFFSET: 2' LEFT ±
GROUND ELEVATION: 215 ±

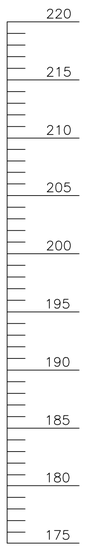

Weston & Sampson

PROJECT	REPORT OF PROBE No.	P-4G
Maskwonicut St. Bridge MassDOT Sharon, MA	SHEET	1 OF 1
	Project No.	2150851
	CHKD BY	Christopher J. Palmer, PE

PROBE Co.	New England Boring Contractors	PROBE LOCATION	See attached plan and note 1
FOREMAN	Matt Vanheusen	GROUND SURFACE ELEV.	EL. 215 +/- DATUM NAVD88
WSE ENGINEER:	Julie A. Eaton, EIT	DATE START 8/31/16	DATE END 8/31/16

SAMPLER:
CASING: SOLID STEM AUGER (4" OUTER DIAMETER).
CASING SIZE: OTHER:

GROUNDWATER READINGS

DATE	TIME	WATER AT	CASING AT	STABILIZATION TIME
Groundwater not observed.				

DEPTH (feet)	CASING (blows/ft)	SAMPLE No.	REC/PEN (in)	DEPTH (ft)	BLOWS/6"	SAMPLE DESCRIPTION	NOTES	STRATUM DESCRIPTION
0							1,2	
5								
10								
15								
20							3	
25						Probe terminated at 24.5 ft.		
30								

GRANULAR SOILS		COHESIVE SOILS	
BLOWS/FT	DENSITY	BLOWS/FT	DENSITY
0-4	V. LOOSE	0-2	V. SOFT
4-10	LOOSE	2-4	SOFT
10-30	M. DENSE	4-8	M. STIFF
30-50	DENSE	8-15	STIFF
> 50	V. DENSE	15-30	V. STIFF
		> 30	HARD

NOTES:
1. Probe was located approximately 73" behind west abutment back face of wall.
2. Abutment wall height was approximately 19.0 ft. at probe location.
3. Auger grinding observed from 21.0 ft. to 24.5 ft.

GENERAL NOTES: i) THE STRATIFICATION LINES REPRESENT THE APPROXIMATE BOUNDARY BETWEEN SOIL TYPES. TRANSITIONS MAY BE GRADUAL.
ii) WATER LEVEL READINGS HAVE BEEN MADE IN THE DRILL HOLES AT TIMES AND UNDER CONDITIONS STATED ON THIS PROBE LOG. FLUCTUATIONS IN THE LEVEL OF GROUNDWATER MAY OCCUR DUE TO OTHER FACTORS THAN THOSE PRESENT AT THE TIME MEASUREMENTS ARE MADE.

PROBE No. P-4G

\\wse03.local\WSE\Projects\MA\MassDOT\77888 Statewide\Sharon Bridge_S-09-003\Geotechnical\Field\[Boring Logs.xlsx]B-2

BORING/PROBE NOTES:

1. FOR BORING/PROBE NOTES, SEE SHEET 03.

xxx xx xxxx	ISSUED FOR CONSTRUCTION
DATE	
USE ONLY PRINTS OF LATEST DATE	

PROBE P–5A

STATION: 14+70 ±
OFFSET: 19' LEFT ±
GROUND ELEVATION: 214 ±

Weston & Sampson

PROJECT: Maskwonicut St. Bridge, MassDOT, Sharon, MA

REPORT OF PROBE No. P-5A
SHEET 1 OF 1
Project No. 2150851
CHKD BY Christopher J. Palmer, PE

PROBE Co. New England Boring Contractors
FOREMAN Matt Vanheusen
WSE ENGINEER: Julie A. Eaton, EIT

PROBE LOCATION See attached plan and note 1
GROUND SURFACE ELEV. EL. 214 +/- DATUM NAVD88
DATE START 8/31/16 DATE END 8/31/16

SAMPLER:
CASING: SOLID STEM AUGER (4" OUTER DIAMETER).
CASING SIZE: OTHER:

GROUNDWATER READINGS

DATE	TIME	WATER AT	CASING AT	STABILIZATION TIME
Groundwater not observed.				

DEPTH (feet)	CASING (blows/ft)	SAMPLE No.	REC/PEN (in)	DEPTH (ft)	BLOWS/6"	SAMPLE DESCRIPTION	NOTES	STRATUM DESCRIPTION
0							1	
						Auger refusal at 2.3 ft.		
5								
10								

GRANULAR SOILS BLOWS/FT	DENSITY	COHESIVE SOILS BLOWS/FT	DENSITY
0-4	V. LOOSE	0-2	V. SOFT
4-10	LOOSE	2-4	SOFT
10-30	M. DENSE	4-8	M. STIFF
30-50	DENSE	8-15	STIFF
> 50	V. DENSE	15-30	V. STIFF
		> 30	HARD

NOTES:
1. Probe was located approximately 20" from north edge of pavement and approximately 5.5 ft. west of chain link security fence.
2. Abutment wall height was approximately 14.0 ft. at probe location.

GENERAL NOTES: i) THE STRATIFICATION LINES REPRESENT THE APPROXIMATE BOUNDARY BETWEEN SOIL TYPES. TRANSITIONS MAY BE GRADUAL.
ii) WATER LEVEL READINGS HAVE BEEN MADE IN THE DRILL HOLES AT TIMES AND UNDER CONDITIONS STATED ON THIS PROBE LOG. FLUCTUATIONS IN THE LEVEL OF GROUNDWATER MAY OCCUR DUE TO OTHER FACTORS THAN THOSE PRESENT AT THE TIME MEASUREMENTS ARE MADE.

PROBE No. P-5A

\\wse03.local\WSE\Projects\MA\MassDOT\77888 Statewide\Sharon Bridge_S-09-003\Geotechnical\Field\[Boring Logs.xlsx]B-2

215
210
205
200

PROBE P–5B

STATION: 14+70 ±
OFFSET: 17' LEFT ±
GROUND ELEVATION: 214 ±

Weston & Sampson

PROJECT: Maskwonicut St. Bridge, MassDOT, Sharon, MA

REPORT OF PROBE No. P-5B
SHEET 1 OF 1
Project No. 2150851
CHKD BY Christopher J. Palmer, PE

PROBE Co. New England Boring Contractors
FOREMAN Matt Vanheusen
WSE ENGINEER: Julie A. Eaton, EIT

PROBE LOCATION See attached plan and note 1
GROUND SURFACE ELEV. EL. 214 +/- DATUM NAVD88
DATE START 8/31/16 DATE END 8/31/16

SAMPLER:
CASING: SOLID STEM AUGER (4" OUTER DIAMETER).
CASING SIZE: OTHER:

GROUNDWATER READINGS

DATE	TIME	WATER AT	CASING AT	STABILIZATION TIME
Groundwater not observed.				

DEPTH (feet)	CASING (blows/ft)	SAMPLE No.	REC/PEN (in)	DEPTH (ft)	BLOWS/6"	SAMPLE DESCRIPTION	NOTES	STRATUM DESCRIPTION
0							1	
5							2	
						Auger refusal at 7.0 ft.		
10								

GRANULAR SOILS BLOWS/FT	DENSITY	COHESIVE SOILS BLOWS/FT	DENSITY
0-4	V. LOOSE	0-2	V. SOFT
4-10	LOOSE	2-4	SOFT
10-30	M. DENSE	4-8	M. STIFF
30-50	DENSE	8-15	STIFF
> 50	V. DENSE	15-30	V. STIFF
		> 30	HARD

NOTES:
1. Probe was located approximately 50" from north edge of pavement and approximately 5.5 ft. west of chain link security fence.
2. Auger was observed to be tilting towards center of the roadway.
3. Abutment wall height was approximately 14.0 ft. at probe location.

GENERAL NOTES: i) THE STRATIFICATION LINES REPRESENT THE APPROXIMATE BOUNDARY BETWEEN SOIL TYPES. TRANSITIONS MAY BE GRADUAL.
ii) WATER LEVEL READINGS HAVE BEEN MADE IN THE DRILL HOLES AT TIMES AND UNDER CONDITIONS STATED ON THIS PROBE LOG. FLUCTUATIONS IN THE LEVEL OF GROUNDWATER MAY OCCUR DUE TO OTHER FACTORS THAN THOSE PRESENT AT THE TIME MEASUREMENTS ARE MADE.

PROBE No. P-5B

\\wse03.local\WSE\Projects\MA\MassDOT\77888 Statewide\Sharon Bridge_S-09-003\Geotechnical\Field\[Boring Logs.xlsx]B-2

PROBE P–5C

STATION: 14+70 ±
OFFSET: 16' LEFT ±
GROUND ELEVATION: 214 ±

Weston & Sampson

PROJECT: Maskwonicut St. Bridge, MassDOT, Sharon, MA

REPORT OF PROBE No. P-5C
SHEET 1 OF 1
Project No. 2150851
CHKD BY Christopher J. Palmer, PE

PROBE Co. New England Boring Contractors
FOREMAN Matt Vanheusen
WSE ENGINEER: Julie A. Eaton, EIT

PROBE LOCATION See attached plan and note 1
GROUND SURFACE ELEV. EL. 214 +/- DATUM NAVD88
DATE START 8/31/16 DATE END 8/31/16

SAMPLER:
CASING: SOLID STEM AUGER (4" OUTER DIAMETER).
CASING SIZE: OTHER:

GROUNDWATER READINGS

DATE	TIME	WATER AT	CASING AT	STABILIZATION TIME
Groundwater not observed.				

DEPTH (feet)	CASING (blows/ft)	SAMPLE No.	REC/PEN (in)	DEPTH (ft)	BLOWS/6"	SAMPLE DESCRIPTION	NOTES	STRATUM DESCRIPTION
0							1	
5						Auger refusal at 6.9 ft.		
10								

GRANULAR SOILS BLOWS/FT	DENSITY	COHESIVE SOILS BLOWS/FT	DENSITY
0-4	V. LOOSE	0-2	V. SOFT
4-10	LOOSE	2-4	SOFT
10-30	M. DENSE	4-8	M. STIFF
30-50	DENSE	8-15	STIFF
> 50	V. DENSE	15-30	V. STIFF
		> 30	HARD

NOTES:
1. Probe was located approximately 65" from north edge of pavement and approximately 5.5 ft. west of chain link security fence.
2. Abutment wall height was approximately 14.0 ft. at probe location.

GENERAL NOTES: i) THE STRATIFICATION LINES REPRESENT THE APPROXIMATE BOUNDARY BETWEEN SOIL TYPES. TRANSITIONS MAY BE GRADUAL.
ii) WATER LEVEL READINGS HAVE BEEN MADE IN THE DRILL HOLES AT TIMES AND UNDER CONDITIONS STATED ON THIS PROBE LOG. FLUCTUATIONS IN THE LEVEL OF GROUNDWATER MAY OCCUR DUE TO OTHER FACTORS THAN THOSE PRESENT AT THE TIME MEASUREMENTS ARE MADE.

PROBE No. P-5C

\\wse03.local\WSE\Projects\MA\MassDOT\77888 Statewide\Sharon Bridge_S-09-003\Geotechnical\Field\[Boring Logs.xlsx]B-2

215
210
205
200
195
190

PROBE P–5D

STATION: 14+70 ±
OFFSET: 14' LEFT ±
GROUND ELEVATION: 214 ±

Weston & Sampson

PROJECT: Maskwonicut St. Bridge, MassDOT, Sharon, MA

REPORT OF PROBE No. P-5D
SHEET 1 OF 1
Project No. 2150851
CHKD BY Christopher J. Palmer, PE

PROBE Co. New England Boring Contractors
FOREMAN Matt Vanheusen
WSE ENGINEER: Julie A. Eaton, EIT

PROBE LOCATION See attached plan and note 1
GROUND SURFACE ELEV. EL. 214 +/- DATUM NAVD88
DATE START 8/31/16 DATE END 8/31/16

SAMPLER:
CASING: SOLID STEM AUGER (4" OUTER DIAMETER).
CASING SIZE: OTHER:

GROUNDWATER READINGS

DATE	TIME	WATER AT	CASING AT	STABILIZATION TIME
Groundwater not observed.				

DEPTH (feet)	CASING (blows/ft)	SAMPLE No.	REC/PEN (in)	DEPTH (ft)	BLOWS/6"	SAMPLE DESCRIPTION	NOTES	STRATUM DESCRIPTION
0							1	
5								
10								

GRANULAR SOILS BLOWS/FT	DENSITY	COHESIVE SOILS BLOWS/FT	DENSITY
0-4	V. LOOSE	0-2	V. SOFT
4-10	LOOSE	2-4	SOFT
10-30	M. DENSE	4-8	M. STIFF
30-50	DENSE	8-15	STIFF
> 50	V. DENSE	15-30	V. STIFF
		> 30	HARD

NOTES:
1. Probe was located approximately 65" from north edge of pavement and approximately 5.5 ft. west of chain link security fence.
2. Abutment wall height was approximately 14.0 ft. at probe location.

GENERAL NOTES: i) THE STRATIFICATION LINES REPRESENT THE APPROXIMATE BOUNDARY BETWEEN SOIL TYPES. TRANSITIONS MAY BE GRADUAL.
ii) WATER LEVEL READINGS HAVE BEEN MADE IN THE DRILL HOLES AT TIMES AND UNDER CONDITIONS STATED ON THIS PROBE LOG. FLUCTUATIONS IN THE LEVEL OF GROUNDWATER MAY OCCUR DUE TO OTHER FACTORS THAN THOSE PRESENT AT THE TIME MEASUREMENTS ARE MADE.

PROBE No. P-5D

\\wse03.local\WSE\Projects\MA\MassDOT\77888 Statewide\Sharon Bridge_S-09-003\Geotechnical\Field\[Boring Logs.xlsx]B-2

BORING/PROBE NOTES:

1. FOR BORING NOTES, SEE SHEET 03.

xxx xx xxxx	ISSUED FOR CONSTRUCTION
DATE	
USE ONLY PRINTS OF LATEST DATE	

PROBE P–6A

STATION: 14+66 ±
OFFSET: 11' RIGHT ±
GROUND ELEVATION: 213 ±

Weston & Sampson

PROJECT: Maskwonicut St. Bridge, MassDOT, Sharon, MA	REPORT OF PROBE No.	P-6A	
	SHEET	1 OF 1	
	Project No.	2150851	
	CHKD BY	Christopher J. Palmer, PE	
PROBE Co.	New England Boring Contractors	PROBE LOCATION	See attached plan and note 1
FOREMAN	Matt Vanheusen	GROUND SURFACE ELEV.	EL. 213 +/- DATUM NAVD88
WSE ENGINEER:	Julie A. Eaton, EIT	DATE START 8/31/16	DATE END 8/31/16
SAMPLER:		GROUNDWATER READINGS	
CASING:	SOLID STEM AUGER (4" OUTER DIAMETER)	DATE / TIME / WATER AT / CASING AT / STABILIZATION TIME	
		Groundwater not observed.	
CASING SIZE:	OTHER:		

DEPTH (feet)	CASING (blows/ft)	SAMPLE No.	REC/PEN (in)	DEPTH (ft)	BLOWS/6"	SAMPLE DESCRIPTION	NOTES	STRATUM DESCRIPTION
0						Auger refusal at 1.1 ft.	1	
5								
10								
15								

GRANULAR SOILS BLOWS/FT	DENSITY	COHESIVE SOILS BLOWS/FT	DENSITY
0-4	V. LOOSE	0-2	V. SOFT
4-10	LOOSE	2-4	SOFT
10-30	M. DENSE	4-8	M. STIFF
30-50	DENSE	8-15	STIFF
> 50	V. DENSE	15-30	V. STIFF
		> 30	HARD

NOTES:
1. Probe was located approximately 31.5" from south edge of pavement and approximately 4.9 ft. west of chain link security fence.
2. Abutment wall height was approximately 14.0 ft. at probe location.

GENERAL NOTES: i) THE STRATIFICATION LINES REPRESENT THE APPROXIMATE BOUNDARY BETWEEN SOIL TYPES. TRANSITIONS MAY BE GRADUAL.
ii) WATER LEVEL READINGS HAVE BEEN MADE IN THE DRILL HOLES AT TIMES AND UNDER CONDITIONS STATED ON THIS PROBE LOG. FLUCTUATIONS IN THE LEVEL OF GROUNDWATER MAY OCCUR DUE TO OTHER FACTORS THAN THOSE PRESENT AT THE TIME MEASUREMENTS ARE MADE.

PROBE No. P-6A

\\wse03.local\WSE\Projects\MA\MassDOT\77888 Statewide\Sharon Bridge_S-09-003\Geotechnical\Field\Boring Logs.xlsx\B-2

PROBE P–6B

STATION: 14+66 ±
OFFSET: 10' RIGHT ±
GROUND ELEVATION: 213 ±

Weston & Sampson

PROJECT: Maskwonicut St. Bridge, MassDOT, Sharon, MA	REPORT OF PROBE No.	P-6B	
	SHEET	1 OF 1	
	Project No.	2150851	
	CHKD BY	Christopher J. Palmer, PE	
PROBE Co.	New England Boring Contractors	PROBE LOCATION	See attached plan and note 1
FOREMAN	Matt Vanheusen	GROUND SURFACE ELEV.	EL. 213 +/- DATUM NAVD88
WSE ENGINEER:	Julie A. Eaton, EIT	DATE START 8/31/16	DATE END 8/31/16
SAMPLER:		GROUNDWATER READINGS	
CASING:	SOLID STEM AUGER (4" OUTER DIAMETER)	DATE / TIME / WATER AT / CASING AT / STABILIZATION TIME	
		Groundwater not observed.	
CASING SIZE:	OTHER:		

DEPTH (feet)	CASING (blows/ft)	SAMPLE No.	REC/PEN (in)	DEPTH (ft)	BLOWS/6"	SAMPLE DESCRIPTION	NOTES	STRATUM DESCRIPTION
0							1	
							2	
5						Probe terminated at 5.0 ft.		
10								
15								

GRANULAR SOILS BLOWS/FT	DENSITY	COHESIVE SOILS BLOWS/FT	DENSITY
0-4	V. LOOSE	0-2	V. SOFT
4-10	LOOSE	2-4	SOFT
10-30	M. DENSE	4-8	M. STIFF
30-50	DENSE	8-15	STIFF
> 50	V. DENSE	15-30	V. STIFF
		> 30	HARD

NOTES:
1. Probe was located approximately 52.5" from south edge of pavement and approximately 4.9 ft. west of chain link security fence.
2. Auger tilting towards center of roadway below 3.0 ft., terminated probe at 5.0 ft.
3. Abutment wall height was approximately 14.0 ft. at probe location.

GENERAL NOTES: i) THE STRATIFICATION LINES REPRESENT THE APPROXIMATE BOUNDARY BETWEEN SOIL TYPES. TRANSITIONS MAY BE GRADUAL.
ii) WATER LEVEL READINGS HAVE BEEN MADE IN THE DRILL HOLES AT TIMES AND UNDER CONDITIONS STATED ON THIS PROBE LOG. FLUCTUATIONS IN THE LEVEL OF GROUNDWATER MAY OCCUR DUE TO OTHER FACTORS THAN THOSE PRESENT AT THE TIME MEASUREMENTS ARE MADE.

PROBE No. P-6B

\\wse03.local\WSE\Projects\MA\MassDOT\77888 Statewide\Sharon Bridge_S-09-003\Geotechnical\Field\Boring Logs.xlsx\B-2

PROBE P–6C

STATION: 14+66 ±
OFFSET: 9' RIGHT ±
GROUND ELEVATION: 213 ±

Weston & Sampson

PROJECT: Maskwonicut St. Bridge, MassDOT, Sharon, MA	REPORT OF PROBE No.	P-6C	
	SHEET	1 OF 1	
	Project No.	2150851	
	CHKD BY	Christopher J. Palmer, PE	
PROBE Co.	New England Boring Contractors	PROBE LOCATION	See attached plan and note 1
FOREMAN	Matt Vanheusen	GROUND SURFACE ELEV.	EL. 213 +/- DATUM NAVD88
WSE ENGINEER:	Julie A. Eaton, EIT	DATE START 8/31/16	DATE END 8/31/16
SAMPLER:		GROUNDWATER READINGS	
CASING:	SOLID STEM AUGER (4" OUTER DIAMETER)	DATE / TIME / WATER AT / CASING AT / STABILIZATION TIME	
		Groundwater not observed.	
CASING SIZE:	OTHER:		

DEPTH (feet)	CASING (blows/ft)	SAMPLE No.	REC/PEN (in)	DEPTH (ft)	BLOWS/6"	SAMPLE DESCRIPTION	NOTES	STRATUM DESCRIPTION
0							1	
							2	
5						Probe terminated at 5.0 ft.		
10								
15								

GRANULAR SOILS BLOWS/FT	DENSITY	COHESIVE SOILS BLOWS/FT	DENSITY
0-4	V. LOOSE	0-2	V. SOFT
4-10	LOOSE	2-4	SOFT
10-30	M. DENSE	4-8	M. STIFF
30-50	DENSE	8-15	STIFF
> 50	V. DENSE	15-30	V. STIFF
		> 30	HARD

NOTES:
1. Probe was located approximately 40" from south edge of pavement and approximately 4.9 ft. west of chain link security fence.
2. Auger appeared to kickoff at 1.5 ft. and titled towards center of roadway until probe terminated at 5.0 ft.
3. Abutment wall height was approximately 14.0 ft. at probe location.

GENERAL NOTES: i) THE STRATIFICATION LINES REPRESENT THE APPROXIMATE BOUNDARY BETWEEN SOIL TYPES. TRANSITIONS MAY BE GRADUAL.
ii) WATER LEVEL READINGS HAVE BEEN MADE IN THE DRILL HOLES AT TIMES AND UNDER CONDITIONS STATED ON THIS PROBE LOG. FLUCTUATIONS IN THE LEVEL OF GROUNDWATER MAY OCCUR DUE TO OTHER FACTORS THAN THOSE PRESENT AT THE TIME MEASUREMENTS ARE MADE.

PROBE No. P-6C

\\wse03.local\WSE\Projects\MA\MassDOT\77888 Statewide\Sharon Bridge_S-09-003\Geotechnical\Field\Boring Logs.xlsx\B-2

PROBE P–6D

STATION: 14+66 ±
OFFSET: 7' RIGHT ±
GROUND ELEVATION: 213 ±

Weston & Sampson

PROJECT: Maskwonicut St. Bridge, MassDOT, Sharon, MA	REPORT OF PROBE No.	P-6D	
	SHEET	1 OF 1	
	Project No.	2150851	
	CHKD BY	Christopher J. Palmer, PE	
PROBE Co.	New England Boring Contractors	PROBE LOCATION	See attached plan and note 1
FOREMAN	Matt Vanheusen	GROUND SURFACE ELEV.	EL. 213 +/- DATUM NAVD88
WSE ENGINEER:	Julie A. Eaton, EIT	DATE START 8/31/16	DATE END 8/31/16
SAMPLER:		GROUNDWATER READINGS	
CASING:	SOLID STEM AUGER (4" OUTER DIAMETER)	DATE / TIME / WATER AT / CASING AT / STABILIZATION TIME	
		Groundwater not observed.	
CASING SIZE:	OTHER:		

DEPTH (feet)	CASING (blows/ft)	SAMPLE No.	REC/PEN (in)	DEPTH (ft)	BLOWS/6"	SAMPLE DESCRIPTION	NOTES	STRATUM DESCRIPTION
0							1	
5						Auger refusal at 6.6 ft.		
10								
15								

GRANULAR SOILS BLOWS/FT	DENSITY	COHESIVE SOILS BLOWS/FT	DENSITY
0-4	V. LOOSE	0-2	V. SOFT
4-10	LOOSE	2-4	SOFT
10-30	M. DENSE	4-8	M. STIFF
30-50	DENSE	8-15	STIFF
> 50	V. DENSE	15-30	V. STIFF
		> 30	HARD

NOTES:
1. Probe was located approximately 66.5" from south edge of pavement and approximately 4.9 ft. west of chain link security fence.
2. Abutment wall height was approximately 14.0 ft. at probe location.

GENERAL NOTES: i) THE STRATIFICATION LINES REPRESENT THE APPROXIMATE BOUNDARY BETWEEN SOIL TYPES. TRANSITIONS MAY BE GRADUAL.
ii) WATER LEVEL READINGS HAVE BEEN MADE IN THE DRILL HOLES AT TIMES AND UNDER CONDITIONS STATED ON THIS PROBE LOG. FLUCTUATIONS IN THE LEVEL OF GROUNDWATER MAY OCCUR DUE TO OTHER FACTORS THAN THOSE PRESENT AT THE TIME MEASUREMENTS ARE MADE.

PROBE No. P-6D

\\wse03.local\WSE\Projects\MA\MassDOT\77888 Statewide\Sharon Bridge_S-09-003\Geotechnical\Field\Boring Logs.xlsx\B-2

PROBE P–6E

STATION: 14+66 ±
OFFSET: 6' RIGHT ±
GROUND ELEVATION: 213 ±

Weston & Sampson

PROJECT: Maskwonicut St. Bridge, MassDOT, Sharon, MA	REPORT OF PROBE No.	P-6E	
	SHEET	1 OF 1	
	Project No.	2150851	
	CHKD BY	Christopher J. Palmer, PE	
PROBE Co.	New England Boring Contractors	PROBE LOCATION	See attached plan and note 1
FOREMAN	Matt Vanheusen	GROUND SURFACE ELEV.	EL. 213 +/- DATUM NAVD88
WSE ENGINEER:	Julie A. Eaton, EIT	DATE START 8/31/16	DATE END 8/31/16
SAMPLER:		GROUNDWATER READINGS	
CASING:	SOLID STEM AUGER (4" OUTER DIAMETER)	DATE / TIME / WATER AT / CASING AT / STABILIZATION TIME	
		Groundwater not observed.	
CASING SIZE:	OTHER:		

DEPTH (feet)	CASING (blows/ft)	SAMPLE No.	REC/PEN (in)	DEPTH (ft)	BLOWS/6"	SAMPLE DESCRIPTION	NOTES	STRATUM DESCRIPTION
0							1	
							2	
5						Auger refusal at 9.1 ft.		
10								
15								

GRANULAR SOILS BLOWS/FT	DENSITY	COHESIVE SOILS BLOWS/FT	DENSITY
0-4	V. LOOSE	0-2	V. SOFT
4-10	LOOSE	2-4	SOFT
10-30	M. DENSE	4-8	M. STIFF
30-50	DENSE	8-15	STIFF
> 50	V. DENSE	15-30	V. STIFF
		> 30	HARD

NOTES:
1. Probe was located approximately 81.5" from south edge of pavement and approximately 4.9 ft. west of chain link security fence.
2. Auger grinding observed from 8.0 ft. to refusal at 9.1 ft.
3. Abutment wall height was approximately 14.0 ft. at probe location.

GENERAL NOTES: i) THE STRATIFICATION LINES REPRESENT THE APPROXIMATE BOUNDARY BETWEEN SOIL TYPES. TRANSITIONS MAY BE GRADUAL.
ii) WATER LEVEL READINGS HAVE BEEN MADE IN THE DRILL HOLES AT TIMES AND UNDER CONDITIONS STATED ON THIS PROBE LOG. FLUCTUATIONS IN THE LEVEL OF GROUNDWATER MAY OCCUR DUE TO OTHER FACTORS THAN THOSE PRESENT AT THE TIME MEASUREMENTS ARE MADE.

PROBE No. P-6E

\\wse03.local\WSE\Projects\MA\MassDOT\77888 Statewide\Sharon Bridge_S-09-003\Geotechnical\Field\Boring Logs.xlsx\B-2

PROBE P–6F

STATION: 14+66 ±
OFFSET: 4' RIGHT ±
GROUND ELEVATION: 213 ±

Weston & Sampson

PROJECT: Maskwonicut St. Bridge, MassDOT, Sharon, MA	REPORT OF PROBE No.	P-6F	
	SHEET	1 OF 1	
	Project No.	2150851	
	CHKD BY	Christopher J. Palmer, PE	
PROBE Co.	New England Boring Contractors	PROBE LOCATION	See attached plan and note 1
FOREMAN	Matt Vanheusen	GROUND SURFACE ELEV.	EL. 213 +/- DATUM NAVD88
WSE ENGINEER:	Julie A. Eaton, EIT	DATE START 8/31/16	DATE END 8/31/16
SAMPLER:		GROUNDWATER READINGS	
CASING:	SOLID STEM AUGER (4" OUTER DIAMETER)	DATE / TIME / WATER AT / CASING AT / STABILIZATION TIME	
		Groundwater not observed.	
CASING SIZE:	OTHER:		

DEPTH (feet)	CASING (blows/ft)	SAMPLE No.	REC/PEN (in)	DEPTH (ft)	BLOWS/6"	SAMPLE DESCRIPTION	NOTES	STRATUM DESCRIPTION
0							1	
							2	
5								
10						Auger refusal at 10.0 ft.		
15								

GRANULAR SOILS BLOWS/FT	DENSITY	COHESIVE SOILS BLOWS/FT	DENSITY
0-4	V. LOOSE	0-2	V. SOFT
4-10	LOOSE	2-4	SOFT
10-30	M. DENSE	4-8	M. STIFF
30-50	DENSE	8-15	STIFF
> 50	V. DENSE	15-30	V. STIFF
		> 30	HARD

NOTES:
1. Probe was located approximately 103.5" from south edge of pavement and approximately 4.9 ft. west of chain link security fence.
2. Auger grinding observed from 8.0 ft. to refusal at 10.0 ft.
3. Abutment wall height was approximately 14.0 ft. at probe location.

GENERAL NOTES: i) THE STRATIFICATION LINES REPRESENT THE APPROXIMATE BOUNDARY BETWEEN SOIL TYPES. TRANSITIONS MAY BE GRADUAL.
ii) WATER LEVEL READINGS HAVE BEEN MADE IN THE DRILL HOLES AT TIMES AND UNDER CONDITIONS STATED ON THIS PROBE LOG. FLUCTUATIONS IN THE LEVEL OF GROUNDWATER MAY OCCUR DUE TO OTHER FACTORS THAN THOSE PRESENT AT THE TIME MEASUREMENTS ARE MADE.

PROBE No. P-6F

\\wse03.local\WSE\Projects\MA\MassDOT\77888 Statewide\Sharon Bridge_S-09-003\Geotechnical\Field\Boring Logs.xlsx\B-2

BORING/PROBE NOTES:

1. FOR BORING/PROBE NOTES, SEE SHEET 03.

XXX XX XXXX	ISSUED FOR CONSTRUCTION
DATE	
USE ONLY PRINTS OF LATEST DATE	

PROBE P-6G

STATION: 14+66 ±
OFFSET: 3' RIGHT ±
GROUND ELEVATION: 213 ±

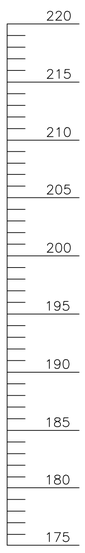

Weston & Sampson

PROJECT	REPORT OF PROBE No.	P-6F
Maskwonicut St. Bridge MassDOT Sharon, MA	SHEET	1 OF 1
	Project No.	2150851
	CHKD BY	Christopher J. Palmer, PE

PROBE Co.	New England Boring Contractors	PROBE LOCATION	See attached plan and note 1
FOREMAN	Matt Vanheusen	GROUND SURFACE ELEV.	EL. 213 +/-. DATUM NAVD88
WSE ENGINEER:	Julie A. Eaton, EIT	DATE START 8/31/16	DATE END 8/31/16

SAMPLER:
CASING: SOLID STEM AUGER (4" OUTER DIAMETER).
CASING SIZE: OTHER:

GROUNDWATER READINGS

DATE	TIME	WATER AT	CASING AT	STABILIZATION TIME
Groundwater not observed.				

DEPTH (feet)	CASING (blows/ft)	SAMPLE No.	REC/PEN (in)	DEPTH (ft)	BLOWS/6"	SAMPLE DESCRIPTION	NOTES	STRATUM DESCRIPTION
0							1	
5								
							2	
10						Probe terminated at 10.0 ft.		
15								
20								
25								
30								

GRANULAR SOILS		COHESIVE SOILS	
BLOWS/FT	DENSITY	BLOWS/FT	DENSITY
0-4	V. LOOSE	0-2	V. SOFT
4-10	LOOSE	2-4	SOFT
10-30	M. DENSE	4-8	M. STIFF
30-50	DENSE	8-15	STIFF
> 50	V. DENSE	15-30	V. STIFF
		> 30	HARD

NOTES:
1. Probe was located approximately 128" from south edge of pavement and approximately 4.9 ft. west of chain link security fence.
2. Auger grinding observed from 8.0 ft. to refusal at 10.0 ft.
3. Abutment wall height was approximately 14.0 ft. at probe location.

GENERAL NOTES: i) THE STRATIFICATION LINES REPRESENT THE APPROXIMATE BOUNDARY BETWEEN SOIL TYPES. TRANSITIONS MAY BE GRADUAL.
ii) WATER LEVEL READINGS HAVE BEEN MADE IN THE DRILL HOLES AT TIMES AND UNDER CONDITIONS STATED ON THIS PROBE LOG. FLUCTUATIONS IN THE LEVEL OF GROUNDWATER MAY OCCUR DUE TO OTHER FACTORS THAN THOSE PRESENT AT THE TIME MEASUREMENTS ARE MADE.

PROBE No. P-6F

\\wsa03.local\WSE\Projects\MA\MassDOT\77888 Statewide\Sharon Bridge_S-09-003\Geotechnical\Field\[Boring Logs.xlsx]B-2

BORING/PROBE NOTES:

1. FOR BORING/PROBE NOTES, SEE SHEET 03.

xxx xx xxxx	ISSUED FOR CONSTRUCTION
DATE	
USE ONLY PRINTS OF LATEST DATE	

SHARON
MASKWONICUT STREET

STATE	FED. AID PROJ. NO.	SHEET NO.	TOTAL SHEETS
MA	-	27	86
PROJECT FILE NO.	608079		

BRIDGE PLAN AND SOUTH ELEVATION

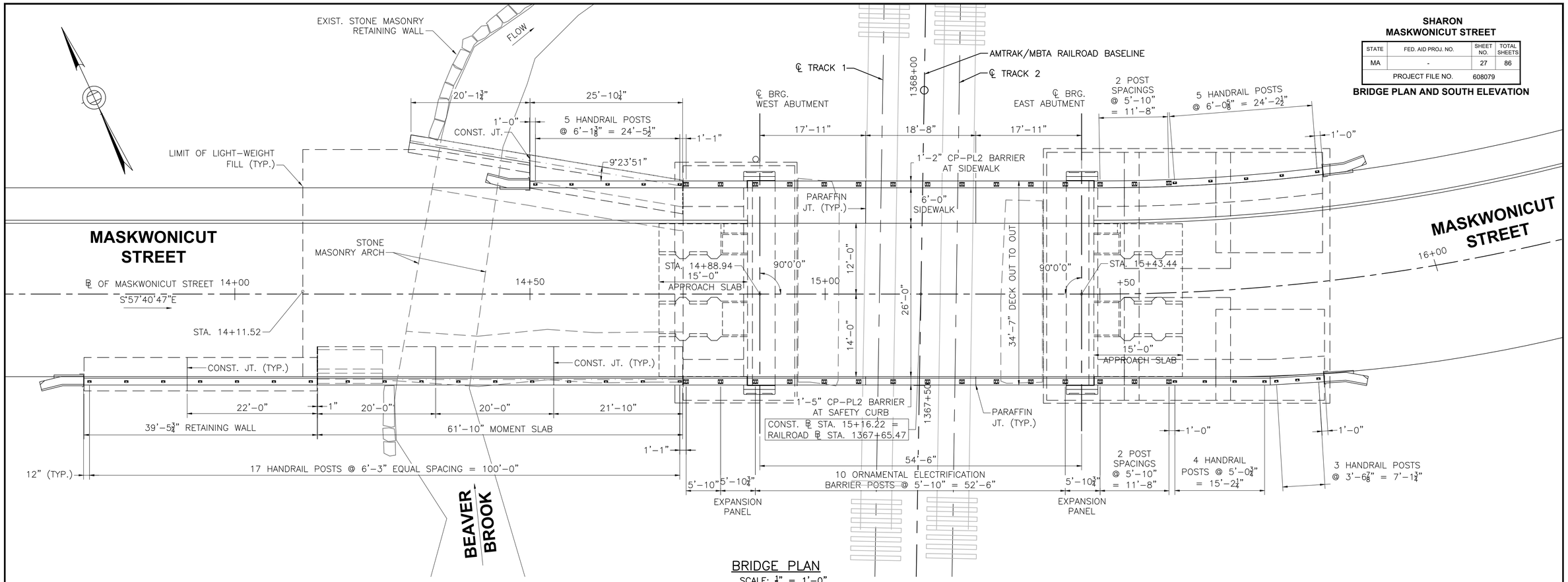

BRIDGE PLAN
SCALE: ⅛" = 1'-0"

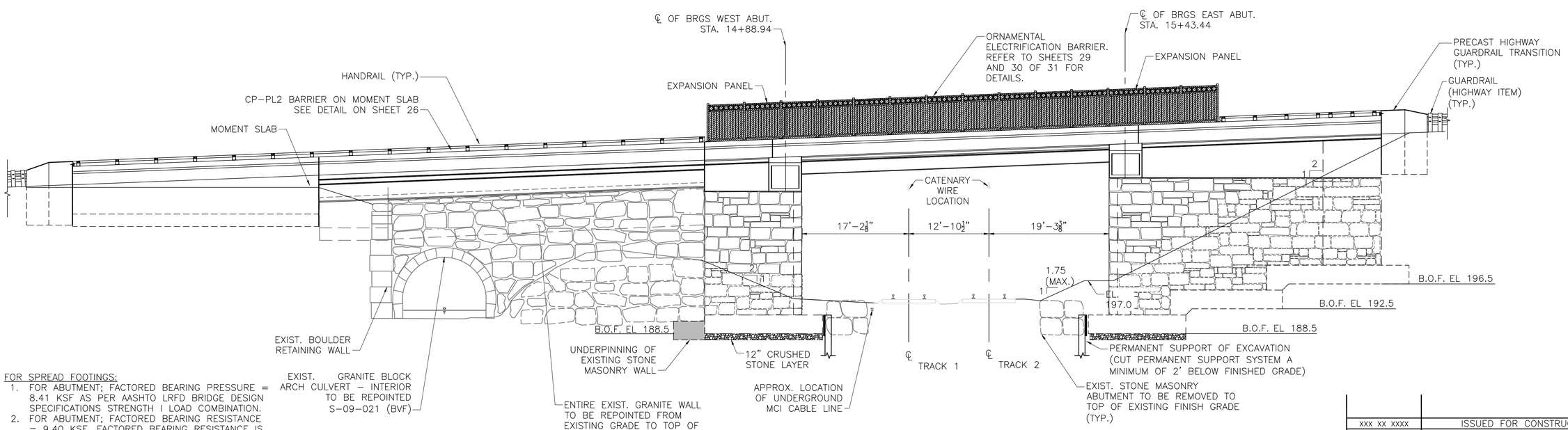

SOUTH ELEVATION
SCALE: ⅛" = 1'-0"

FOR SPREAD FOOTINGS:

1. FOR ABUTMENT; FACTORED BEARING PRESSURE = 8.41 KSF AS PER AASHTO LRFD BRIDGE DESIGN SPECIFICATIONS STRENGTH I LOAD COMBINATION.
2. FOR ABUTMENT; FACTORED BEARING RESISTANCE = 9.40 KSF. FACTORED BEARING RESISTANCE IS THE PRODUCT OF THE NOMINAL BEARING RESISTANCE AND A RESISTANCE FACTOR OF 0.45.

xxx xx xxxx	ISSUED FOR CONSTRUCTION
DATE	
USE ONLY PRINTS OF LATEST DATE	

SHARON
MASKWONICUT STREET

STATE	FED. AID PROJ. NO.	SHEET NO.	TOTAL SHEETS
MA	-	28	86
PROJECT FILE NO.	608079		

NORTH ELEVATION

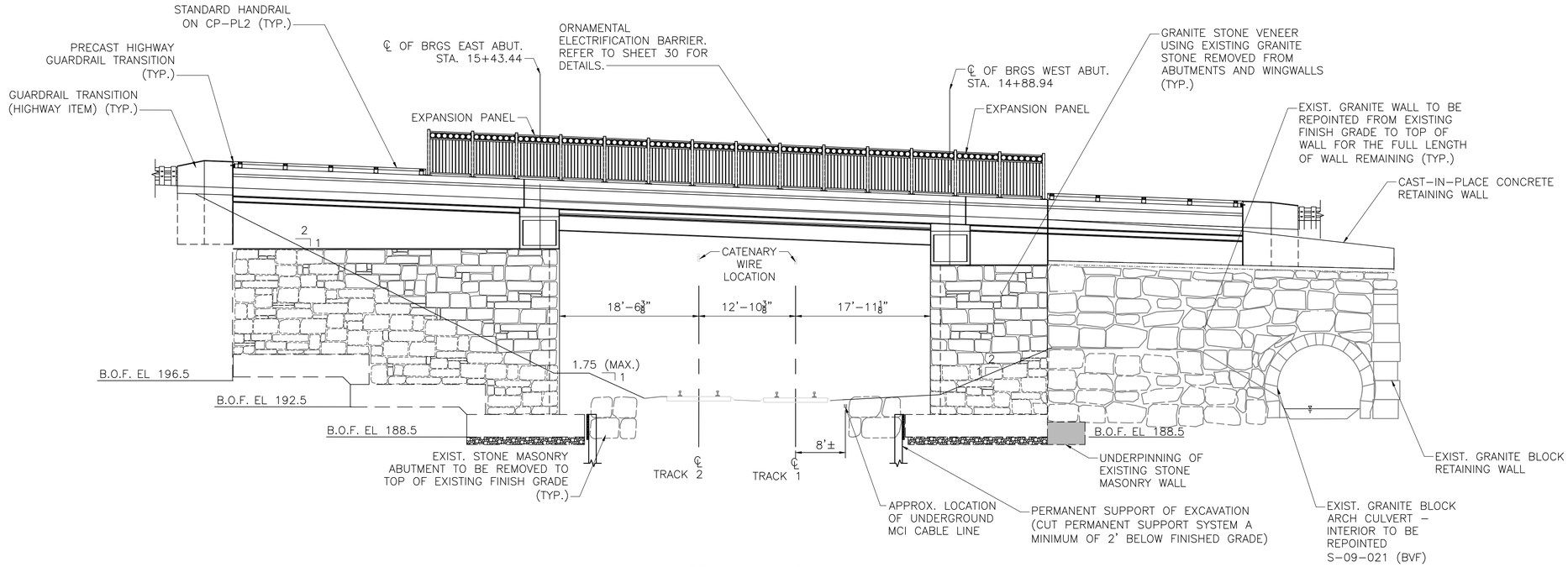

NORTH ELEVATION
SCALE: 1/8" = 1'–0"

xxx xx xxxx	ISSUED FOR CONSTRUCTION
DATE	
USE ONLY PRINTS OF LATEST DATE	

SHARON
MASKWONICUT STREET

STATE	FED. AID PROJ. NO.	SHEET NO.	TOTAL SHEETS
MA	-	29	86
PROJECT FILE NO.	608079		

DEMOLITION PLAN

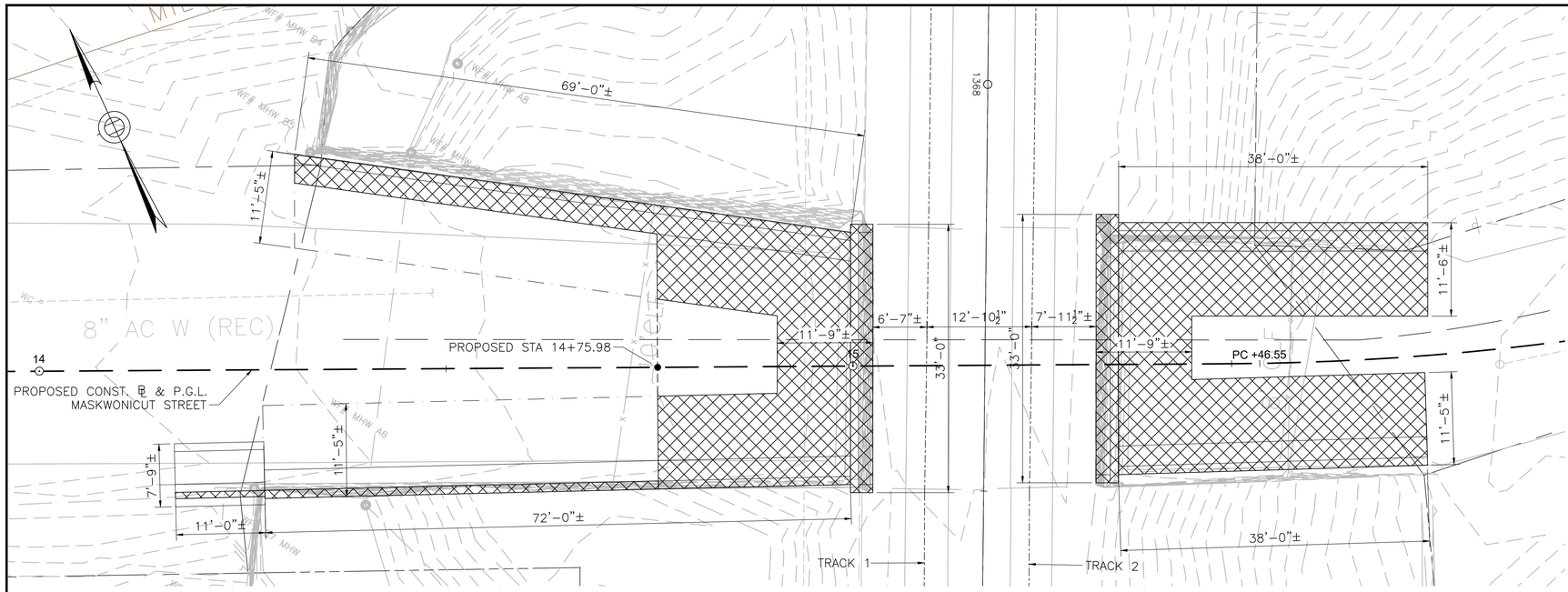

BRIDGE DEMOLITION PLAN
SCALE: ⅛" = 1'-0"

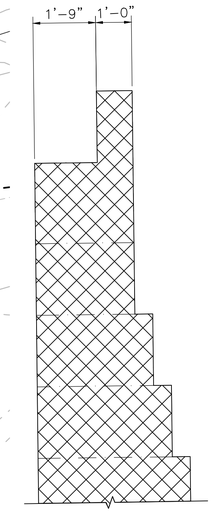

TYPICAL EXISTING ABUTMENT SECTION
SCALE: ½" = 1'-0"

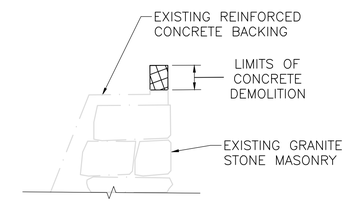

SECTION 1
SCALE: ¼" = 1'-0"

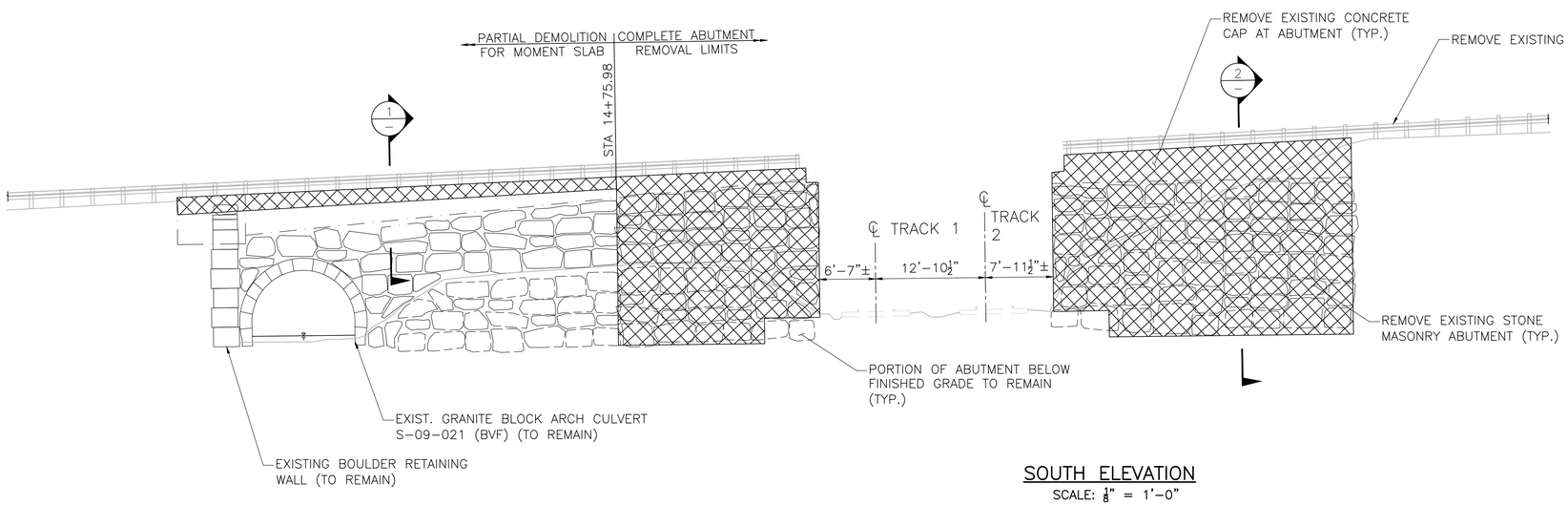

SOUTH ELEVATION
SCALE: ⅛" = 1'-0"

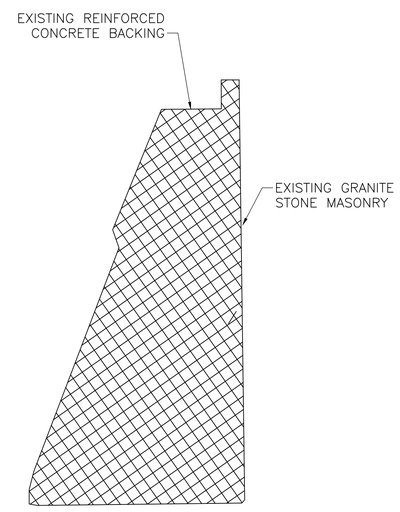

SECTION 2
SCALE: ¼" = 1'-0"

xxx xx xxxx	ISSUED FOR CONSTRUCTION
DATE	
USE ONLY PRINTS OF LATEST DATE	

SHARON
MASKWONICUT STREET

STATE	FED. AID PROJ. NO.	SHEET NO.	TOTAL SHEETS
MA	-	30	86
PROJECT FILE NO.	608079		

ABUTMENT PLAN AND ELEVATIONS

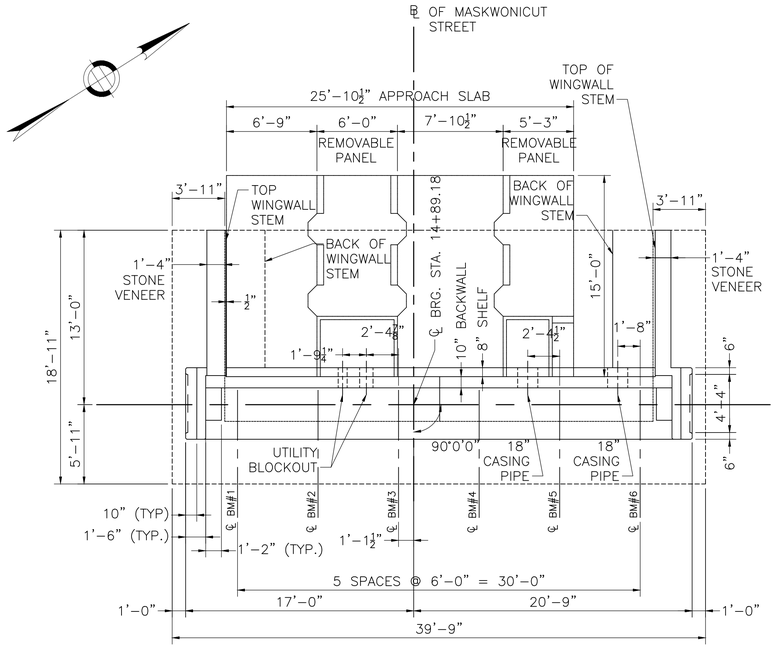

WEST ABUTMENT PLAN
SCALE: 3/16" = 1'-0"

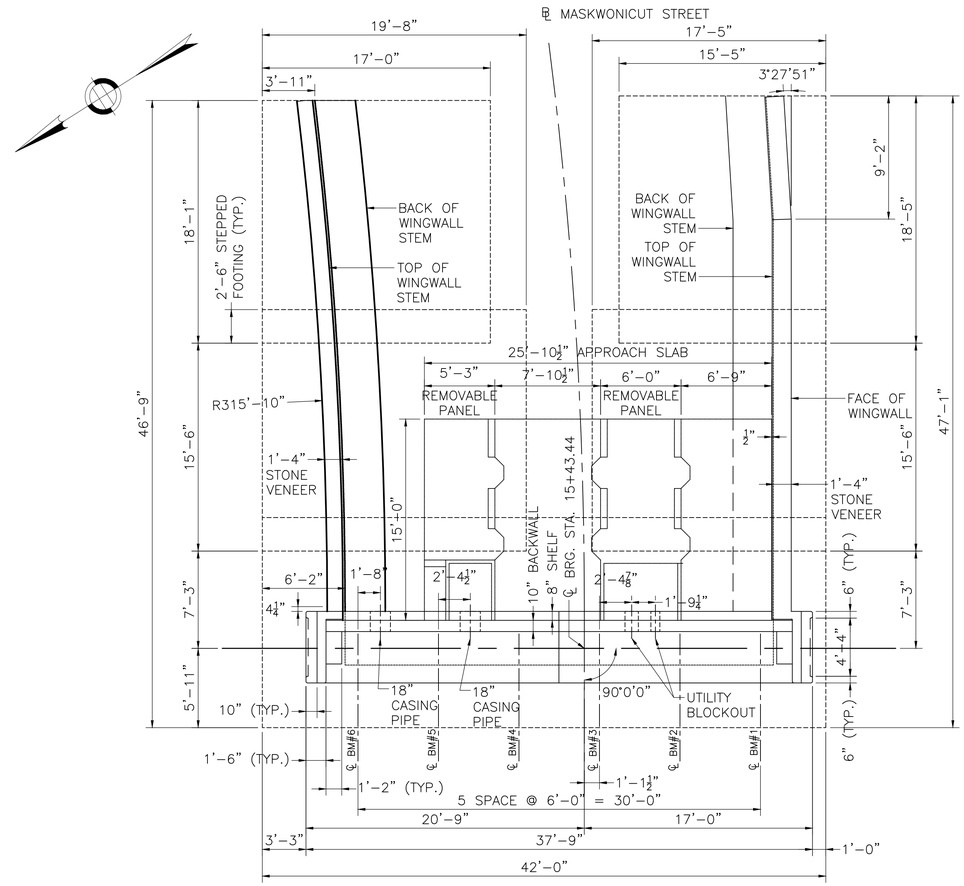

EAST ABUTMENT PLAN
SCALE: 3/16" = 1'-0"

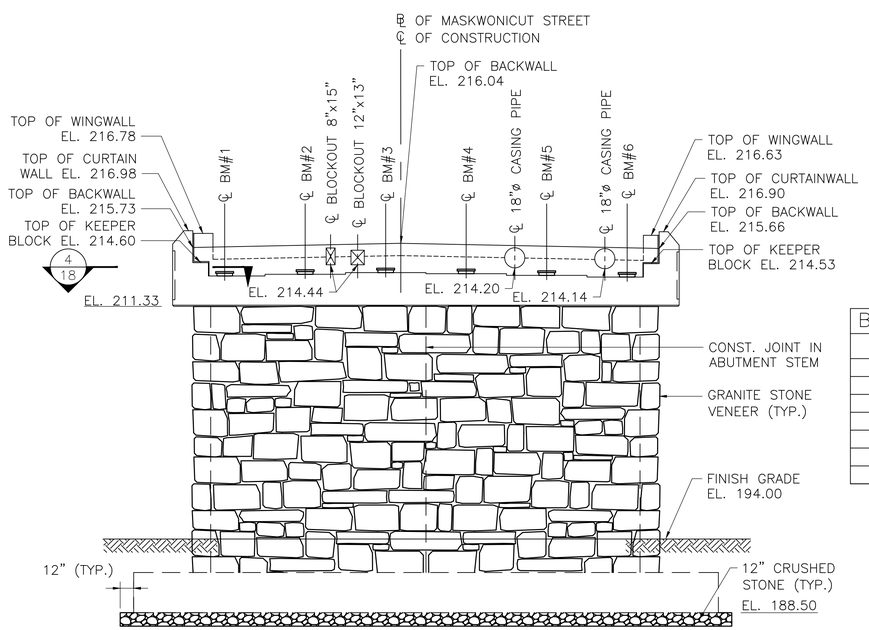

WEST ABUTMENT ELEVATION
SCALE: 3/16" = 1'-0"

BEAM SEAT ELEVATION	
WEST ABUTMENT	
BEAM	ELEVATION
BM#1	213.60
BM#2	213.73
BM#3	213.85
BM#4	213.78
BM#5	213.65
BM#6	213.53

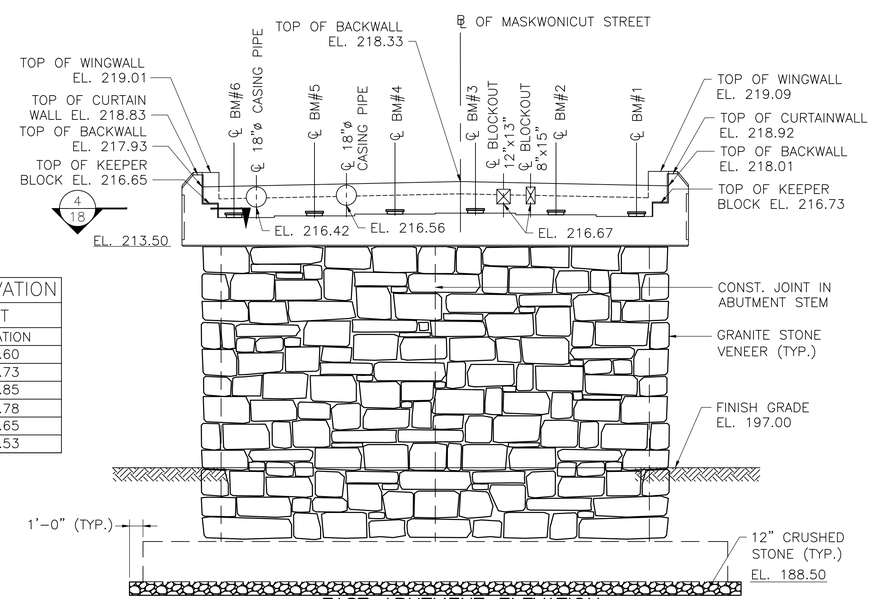

EAST ABUTMENT ELEVATION
SCALE: 3/16" = 1'-0"

BEAM SEAT ELEVATION	
EAST ABUTMENT	
BEAM	ELEVATION
BM#1	215.73
BM#2	215.85
BM#3	215.98
BM#4	215.90
BM#5	215.77
BM#6	215.65

xxx xx xxxx	ISSUED FOR CONSTRUCTION
DATE	
USE ONLY PRINTS OF LATEST DATE	

SHEET 16 OF 33 SHEETS BRIDGE NO. S-09-003 (C13)

608079_BR16(S09003).DWG Plotted on 18-Dec-2020 1:28 AM

608079 Second Structural Submittal (S3) 20-NOVEMBER-2020

SHARON
MASKWONICUT STREET

STATE	FED. AID PROJ. NO.	SHEET NO.	TOTAL SHEETS
MA	-	31	86
PROJECT FILE NO.	608079		

ABUTMENT SECTIONS AND DETAILS
1 OF 2

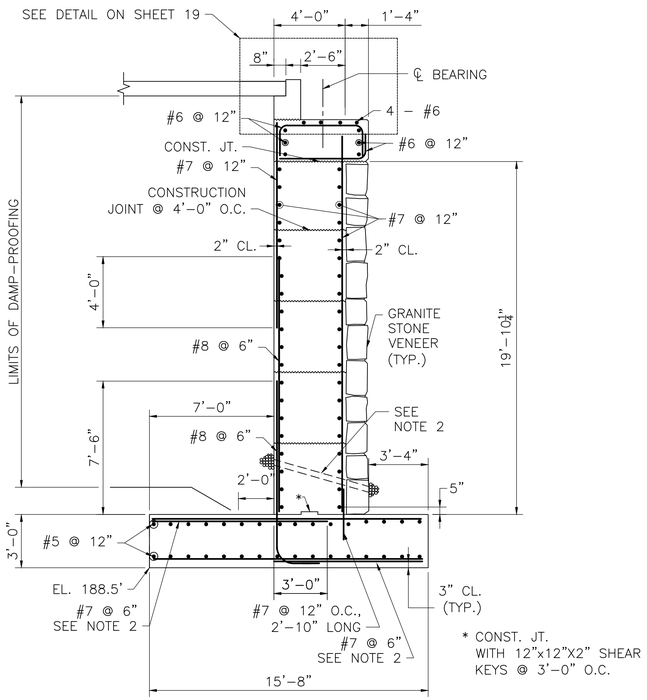

WEST ABUTMENT SECTION
SCALE: ¼" = 1'-0"

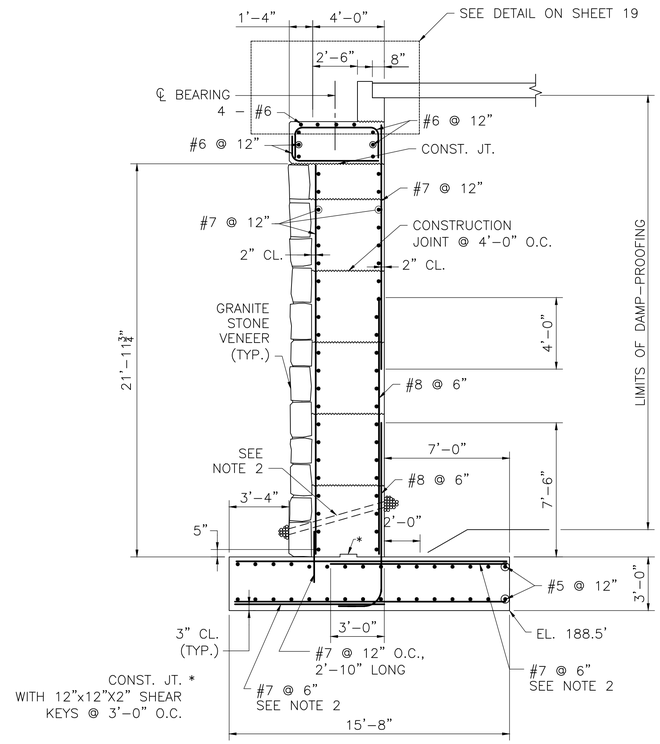

EAST ABUTMENT SECTION
SCALE: ¼" = 1'-0"

NOTES:

1. 4" ø WEEP HOLES 10'-0" O.C. LOCATED 12" ABOVE THE HEEL OF THE FOOTING SLOPING 1" PER FOOT TOWARDS THE FRONT FACE. PROVIDE 1 CUBIC YARD OF CRUSHED STONE AT EACH END OF WEEP HOLE.
2. EXTEND EVERY 2nd BAR FULL LENGTH AS SHOWN.
3. ALL CONCRETE SHALL BE 4000 PSI CONCRETE.
4. THE FACTORED BEARING PRESSURE = 8.41 KSF AS PER AASHTO LRFD BRIDGE DESIGN SPECIFICATIONS STRENGTH I LOAD COMBINATION.
5. FACTORED BEARING RESISTANCE = 9.40 KSF. FACTORED BEARING RESISTANCE IS THE PRODUCT OF THE NOMINAL BEARING RESISTANCE AND A RESISTANCE FACTOR OF 0.45

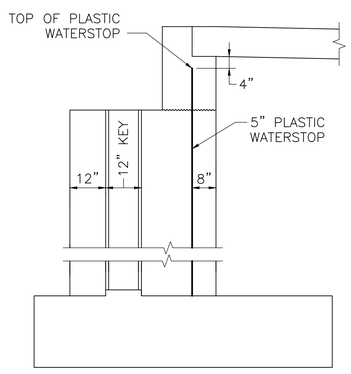

NOTE:
REINFORCEMENT SHALL BE CONTINUOUS THRU CONSTRUCTION JOINTS.

VERTICAL SECTION THRU CONSTRUCTION JOINT
SCALE: ½" = 1'-0"

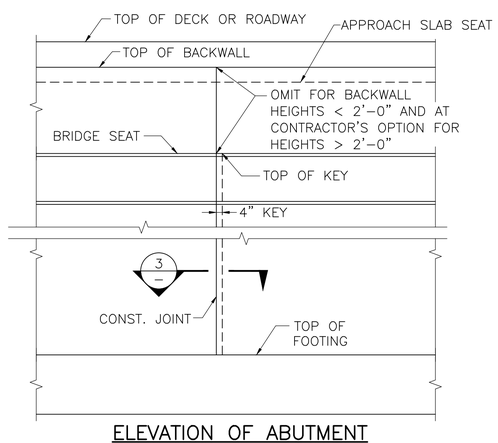

ELEVATION OF ABUTMENT
SCALE: ½" = 1'-0"

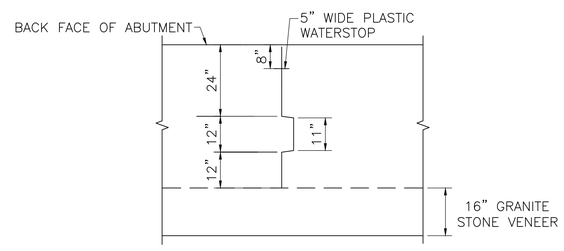

SECTION 3
SCALE: ½" = 1'-0"

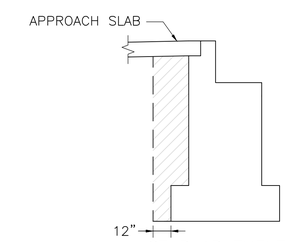

STUB ABUTMENT

NOTE:
HATCHED AREA INDICATES LIMITS OF GRAVEL BORROW FOR BACKFILLING STRUCTURES AND PIPES.

LIMITS OF GRAVEL BORROW FOR BACKFILLING STRUCTURES AND PIPES
SCALE: ¼" = 1'-0"

xxx xx xxxx	ISSUED FOR CONSTRUCTION
DATE	
USE ONLY PRINTS OF LATEST DATE	

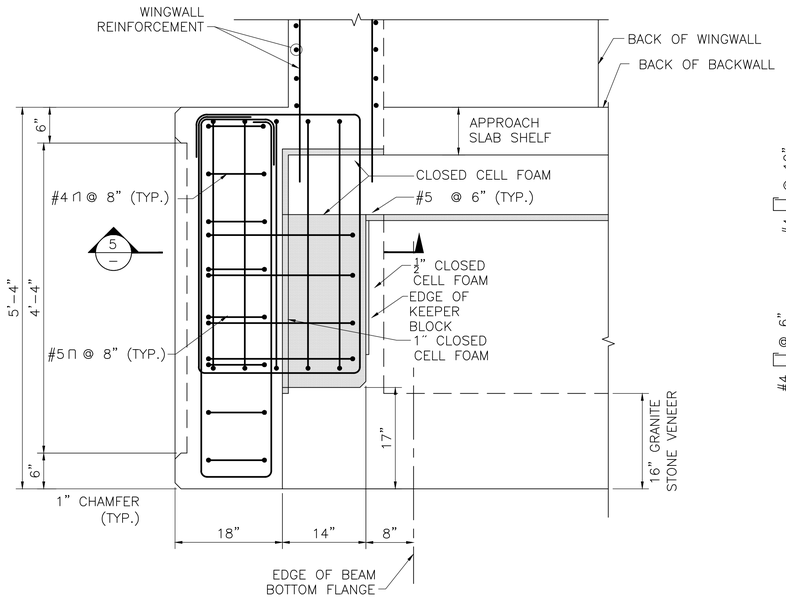

SECTION 4/16

SCALE: 1" = 1'-0"

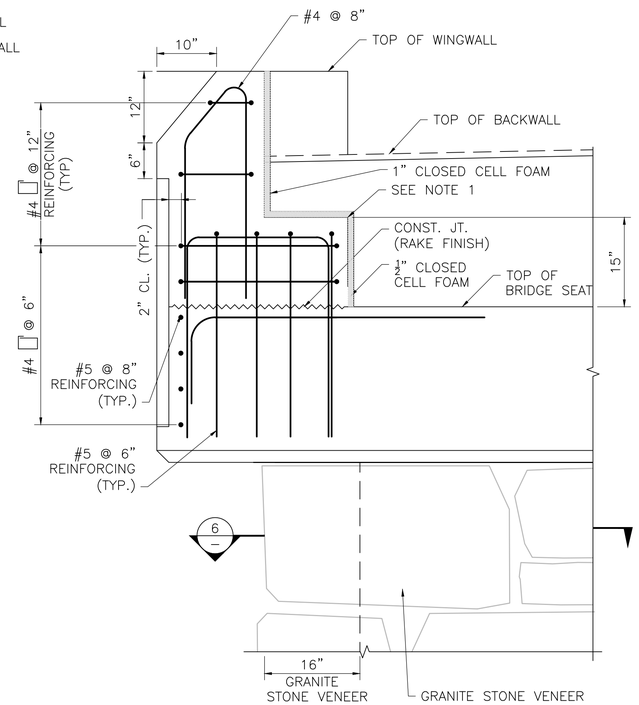

NOTES:

1. TOP OF KEEPER BLOCK SHALL BE TROWELED SMOOTH PARALLEL TO PROFILE GRADE.
2. ABUTMENT REINFORCEMENT BELOW CONSTRUCTION JOINT HAS BEEN OMITTED FOR CLARITY.

SECTION 5

SCALE: 1" = 1'-0"

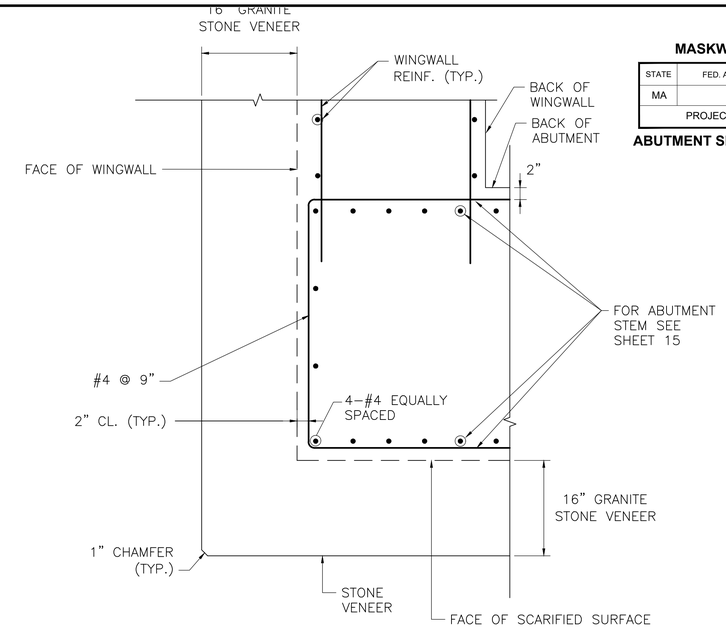

SECTION 6

SCALE: 1" = 1'-0"

SHARON
MASKWONICUT STREET

STATE	FED. AID PROJ. NO.	SHEET NO.	TOTAL SHEETS
MA	–	32	86
PROJECT FILE NO.	608079		

ABUTMENT SECTIONS AND DETAILS
2 OF 2

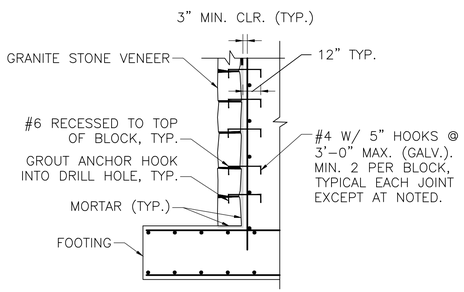

GRANITE STONE VENEER ATTACHMENT DETAIL

SCALE: 1/4" = 1'-0"

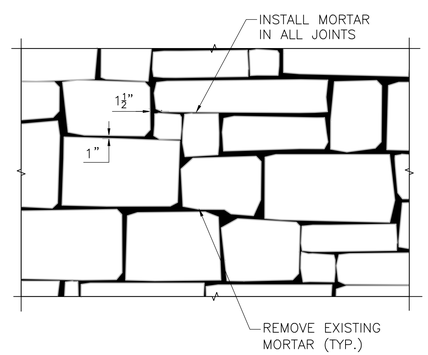

MASONRY REPOINTING DETAIL

SCALE: 1/2" = 1'-0"

xxx xx xxxx	ISSUED FOR CONSTRUCTION
DATE	
USE ONLY PRINTS OF LATEST DATE	

SHARON
MASKWONICUT STREET

STATE	FED. AID PROJ. NO.	SHEET NO.	TOTAL SHEETS
MA	–	33	86
PROJECT FILE NO.	608079		

APPROACH SLAB DETAILS

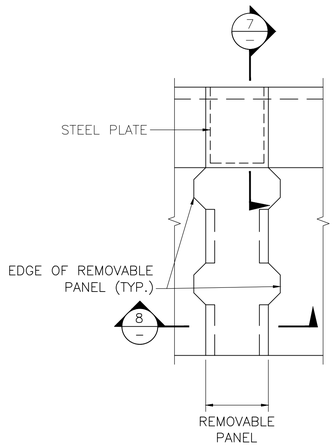

REMOVABLE APPROACH SLAB PANEL PLAN
SCALE: $\frac{1}{4}$" = 1'–0"

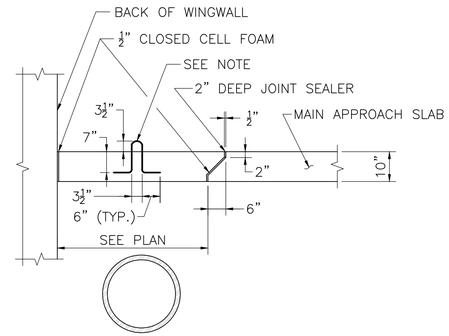

NOTE:
2 LIFT HOOKS REQUIRED. USE #5 COATED REBAR AT QUARTER POINTS.

SECTION 1
SCALE: $\frac{1}{2}$" = 1'–0"

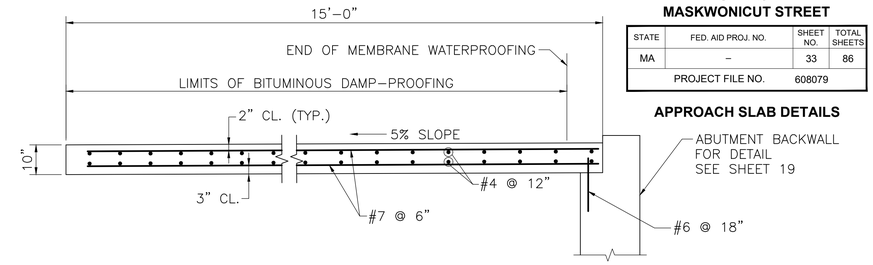

NOTES:
1. APPROACH SLAB TO BE 4000 PSI, 1½ IN, 565 CEMENT CONCRETE.
2. PLACE LONGITUDINAL REINFORCEMENT (PARALLEL TO ℄ OF CONSTRUCTION) PLACE TRANSVERSE REINFORCEMENT PARALLEL TO ABUTMENT.

APPROACH SLAB DETAILS
SCALE: $\frac{1}{2}$" = 1'–0"

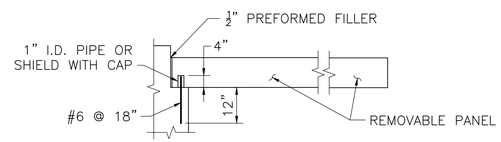

PANEL DETAIL AT ABUTMENT
SCALE: $\frac{1}{2}$" = 1'–0"

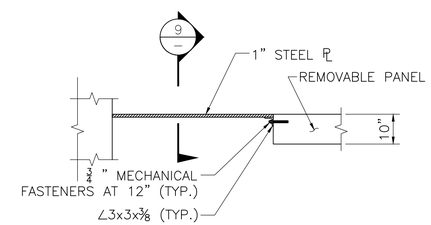

SECTION 7
SCALE: $\frac{1}{2}$" = 1'–0"

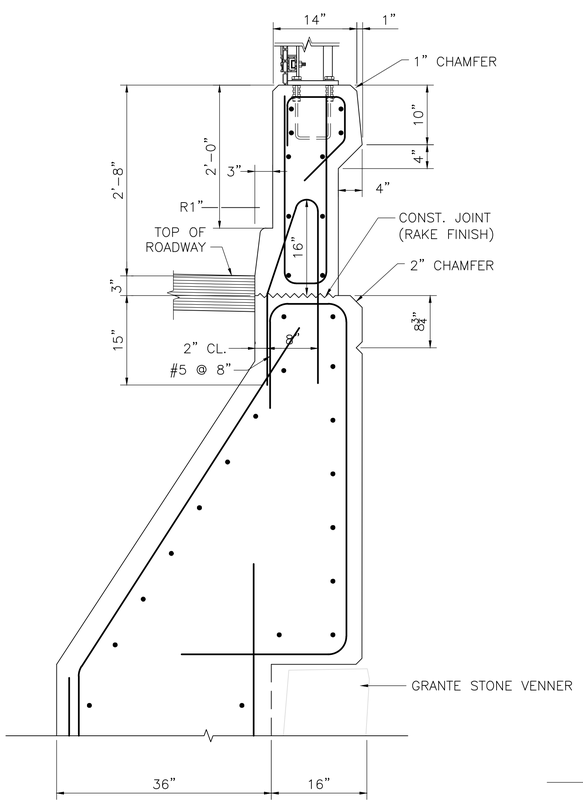

TOP OF U–WINGWALL DETAILS AT SAFETY CURB
SCALE: 1" = 1'–0"

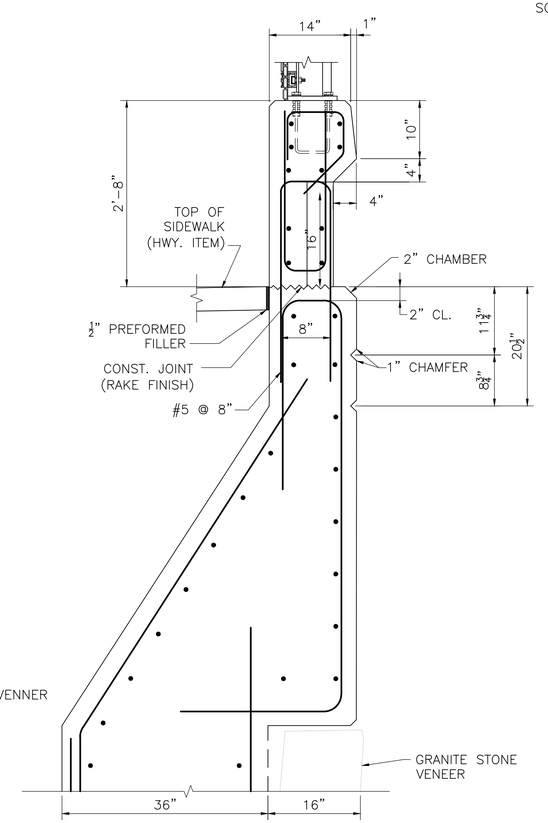

TOP OF U–WINGWALL DETAILS AT SIDEWALK
SCALE: 1" = 1'–0"

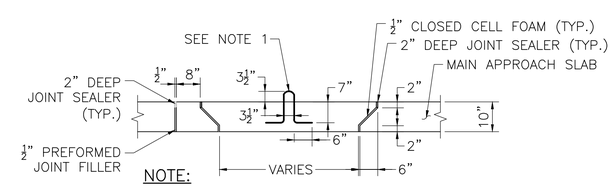

NOTE:
2 LIFT HOOKS REQUIRED. USE #5 COATED REBAR AT QUARTER POINTS.

SECTION 8
SCALE: $\frac{1}{2}$" = 1'–0"

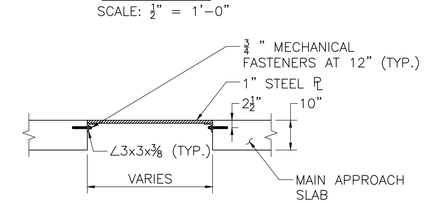

SECTION 9
SCALE: $\frac{1}{2}$" = 1'–0"

xxx xx xxxx	ISSUED FOR CONSTRUCTION
DATE	
USE ONLY PRINTS OF LATEST DATE	

SHARON
MASKWONICUT STREET

STATE	FED. AID PROJ. NO.	SHEET NO.	TOTAL SHEETS
MA	-	34	86
PROJECT FILE NO.	608079		

WINGWALL ELEVATIONS
1 OF 2

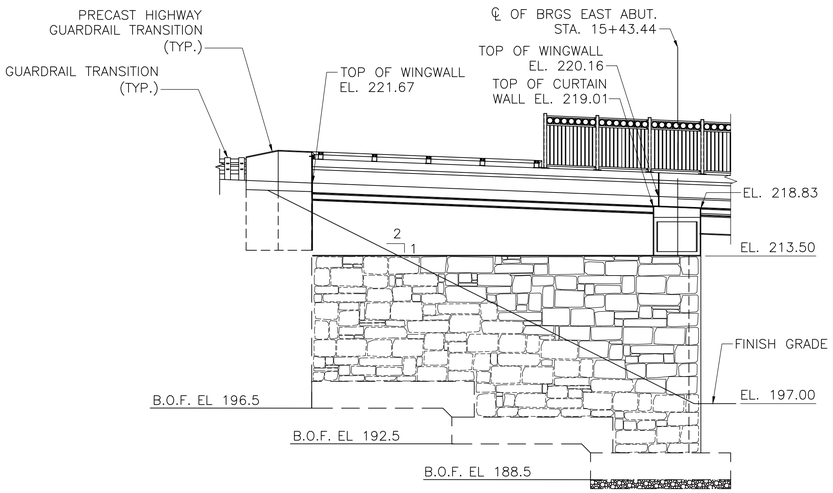

NORTHEAST WINGWALL ELEVATION
SCALE: 1/8" = 1'-0"

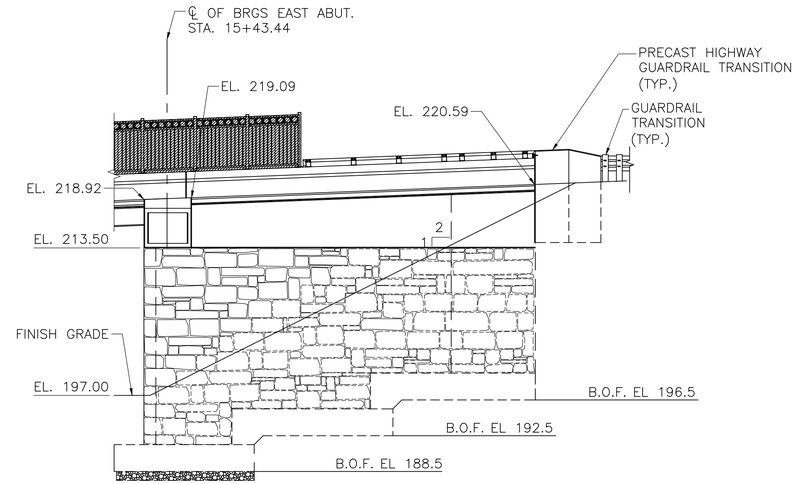

SOUTHEAST WINGWALL ELEVATION
SCALE: 1/8" = 1'-0"

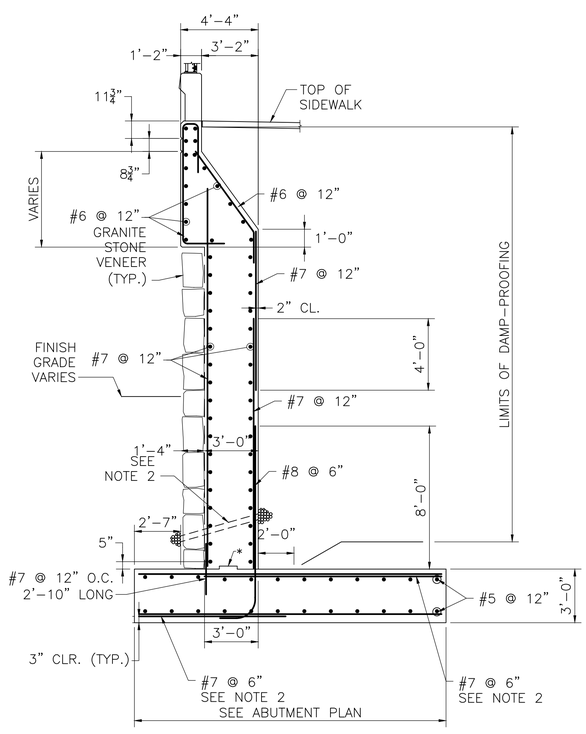

TYPICAL NORTHEAST WINGWALL SECTION
SCALE: ¼" = 1'-0"

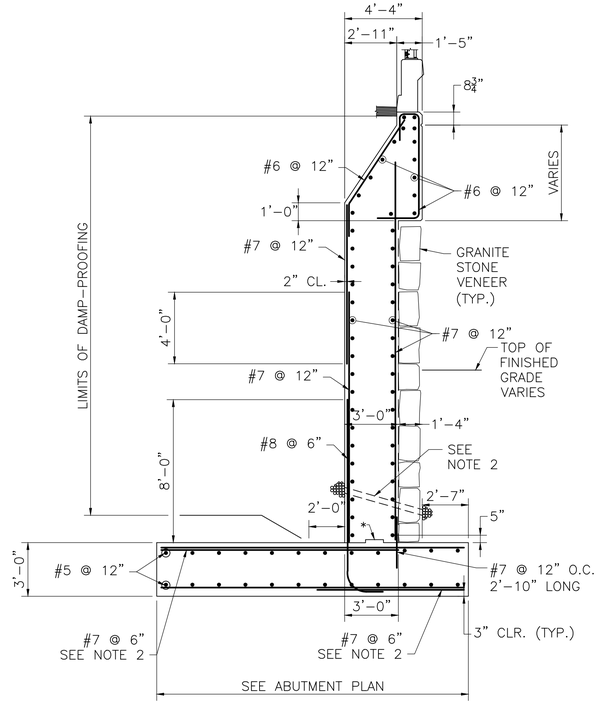

TYPICAL SOUTHEAST WINGWALL SECTION
SCALE: ¼" = 1'-0"

xxx xx xxxx	ISSUED FOR CONSTRUCTION
DATE	
USE ONLY PRINTS OF LATEST DATE	

SHARON
MASKWONICUT STREET

STATE	FED. AID PROJ. NO.	SHEET NO.	TOTAL SHEETS
MA	-	35	86
PROJECT FILE NO.	608079		

WINGWALL ELEVATIONS
2 OF 2

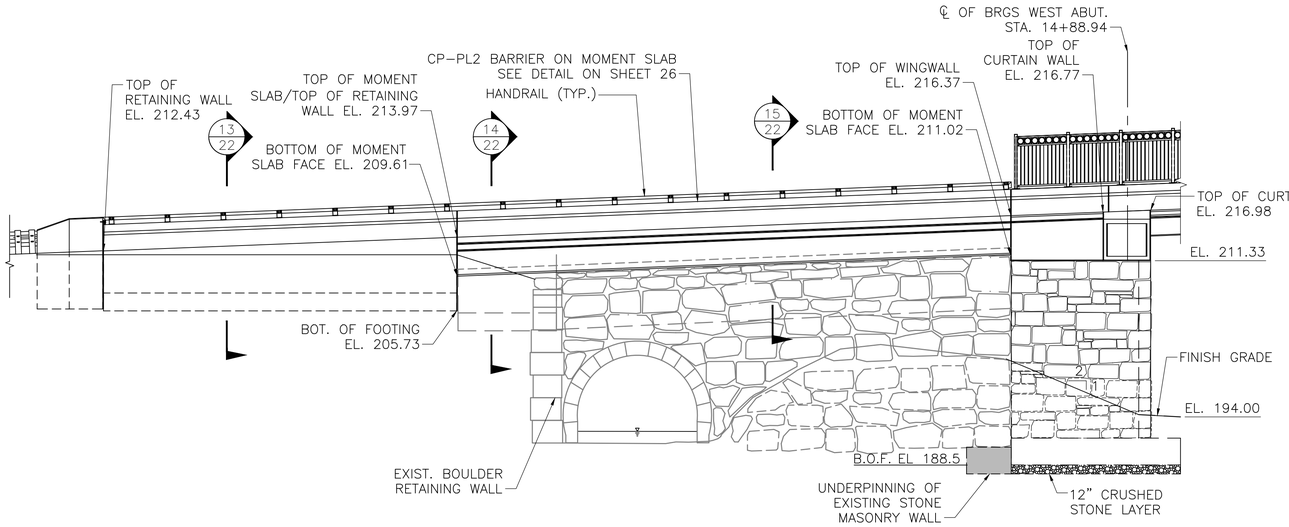

SOUTHWEST WINGWALL ELEVATION
SCALE: 1/8" = 1'-0"

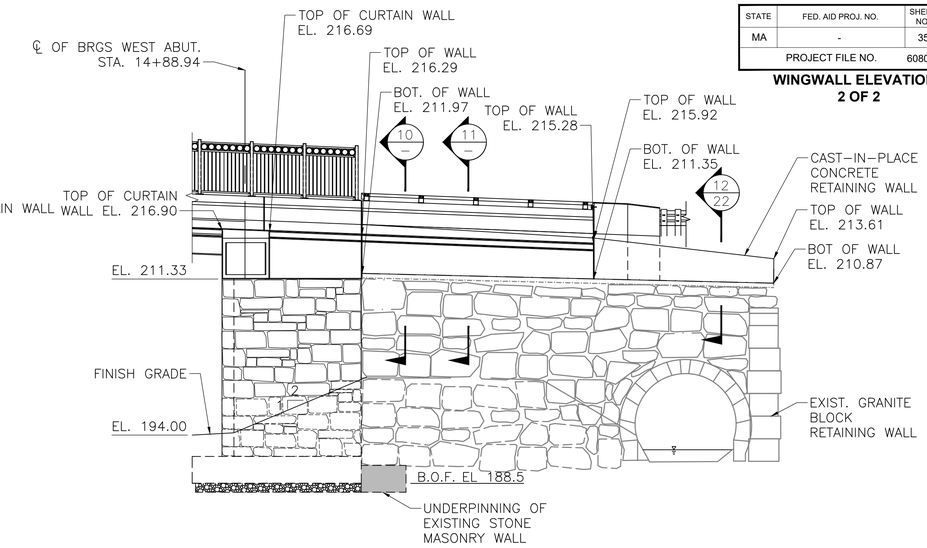

NORTHWEST WINGWALL ELEVATION
SCALE: 1/8" = 1'-0"

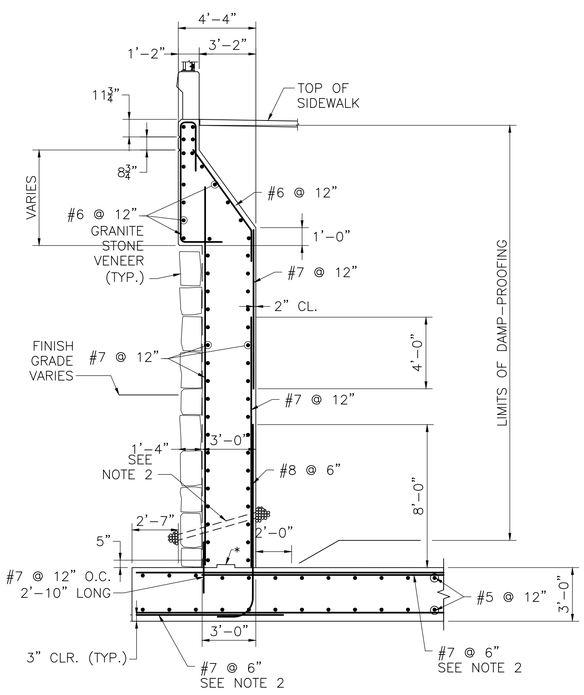

TYPICAL NORTHWEST WINGWALL SECTION
SCALE: ¼" = 1'-0"

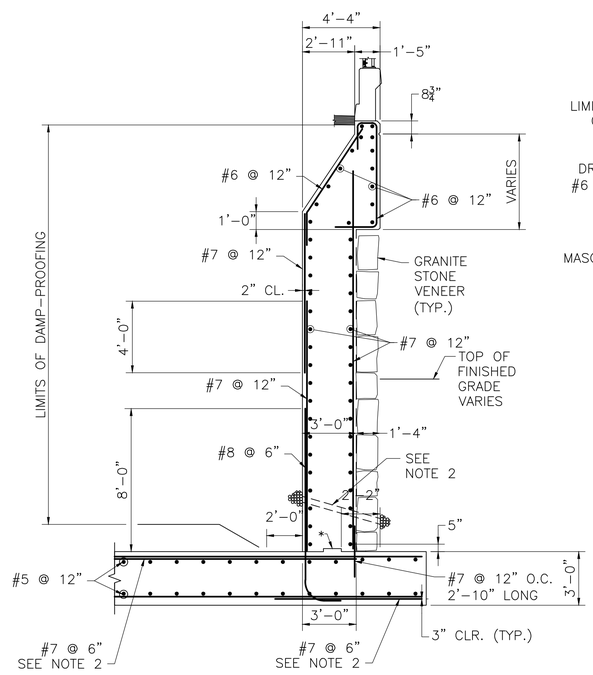

TYPICAL SOUTHWEST WINGWALL SECTION
SCALE: ¼" = 1'-0"

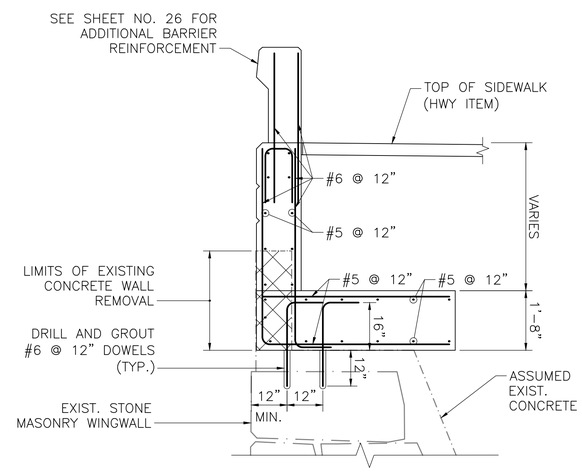

SECTION 10
SCALE: ½" = 1'-0"

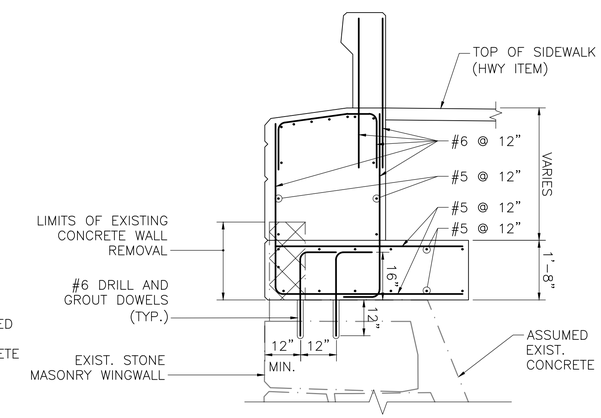

SECTION 11
SCALE: ½" = 1'-0"

xxx xx xxxx	ISSUED FOR CONSTRUCTION
DATE	
USE ONLY PRINTS OF LATEST DATE	

SHARON
MASKWONICUT STREET

STATE	FED. AID PROJ. NO.	SHEET NO.	TOTAL SHEETS
MA	-	36	86
PROJECT FILE NO.	608079		

WINGWALL SECTIONS AND DETAILS

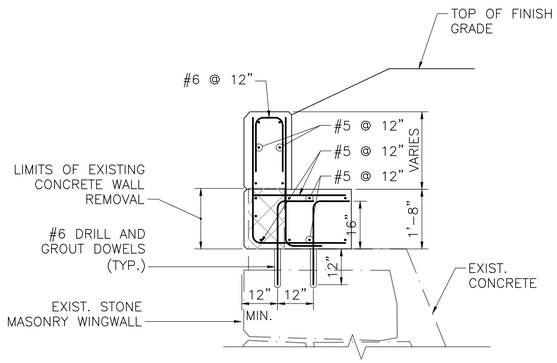

SECTION 12 / 21
SCALE: ½" = 1'-0"

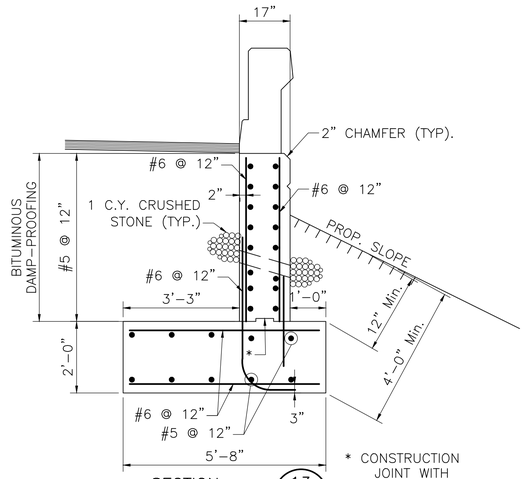

* CONSTRUCTION JOINT WITH 4"x2" KEY

SECTION 13 / 21
SCALE: ½" = 1'-0"

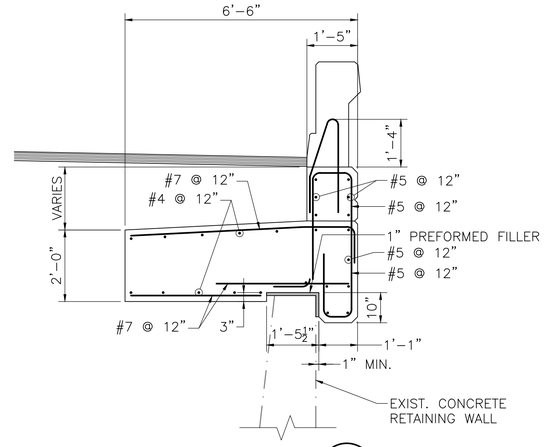

SECTION 14 / 21
SCALE: ½" = 1'-0"

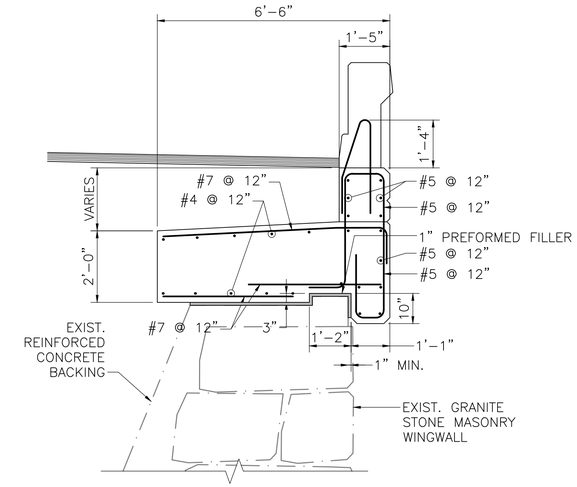

SECTION 15 / 21
SCALE: ½" = 1'-0"

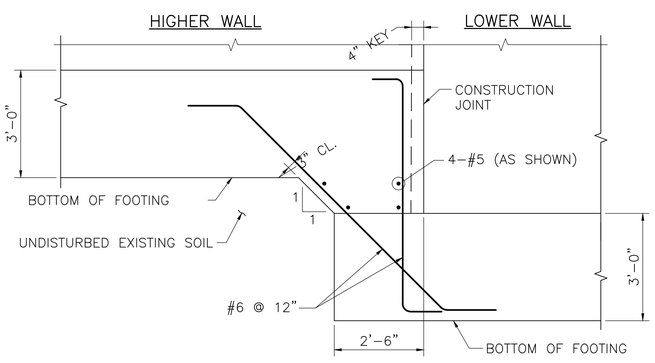

STEPPED-UP FOOTING DETAIL
SCALE: ½" = 1'-0"

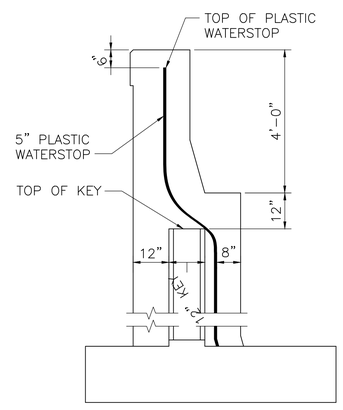

CANTILEVER WINGWALL
VERTICAL SECTION THROUGH CONSTRUCTION JOINT
SCALE: ½" = 1'-0"

NOTE:
REINFORCEMENT SHALL BE CONTINUOUS THROUGH CONSTRUCTION JOINTS.

xxx xx xxxx	ISSUED FOR CONSTRUCTION
DATE	
USE ONLY PRINTS OF LATEST DATE	

SHARON
MASKWONICUT STREET

STATE	FED. AID PROJ. NO.	SHEET NO.	TOTAL SHEETS
MA	–	37	86
PROJECT FILE NO.	608079		

TOP OF WALL AND PRECAST GUARDRAIL TRANSITION BASE

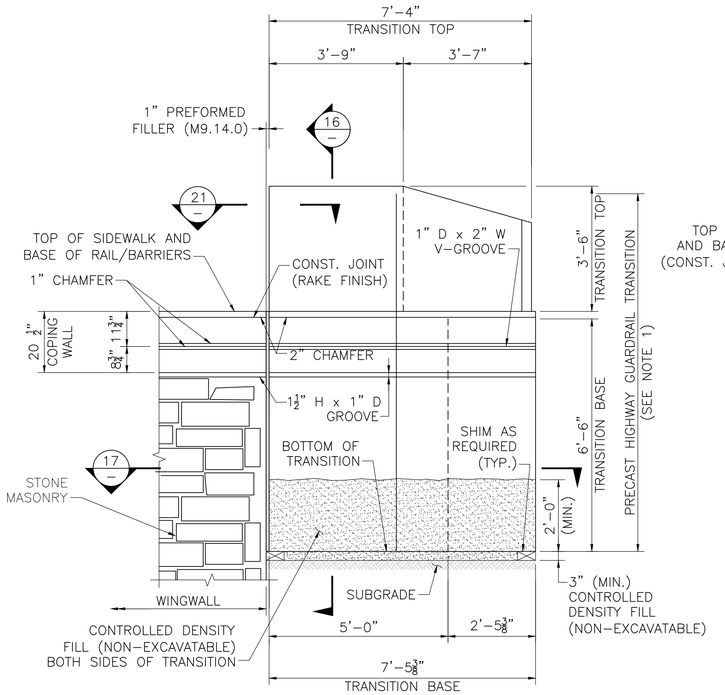

PRECAST GUARDRAIL TRANSITION ELEVATION AT SIDEWALK

SCALE: 1/2" = 1'-0"

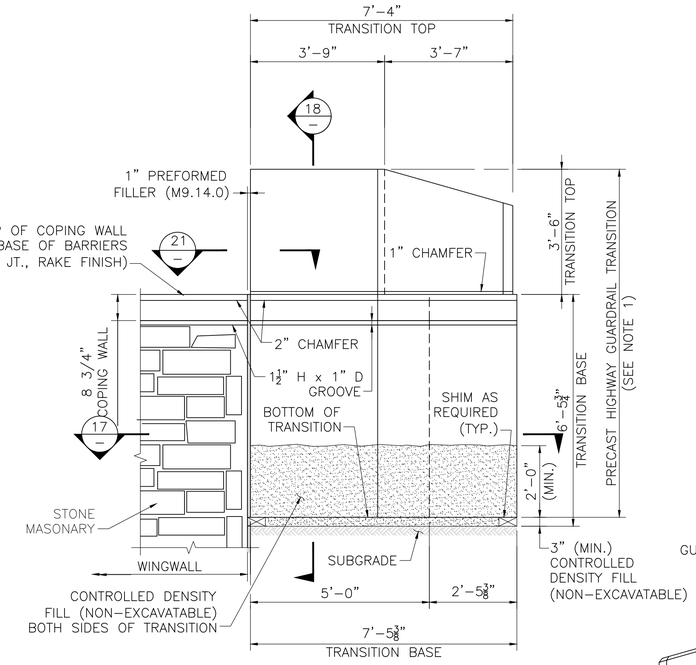

PRECAST GUARDRAIL TRANSITION ELEVATION AT SAFETY CURB

SCALE: 1/2" = 1'-0"

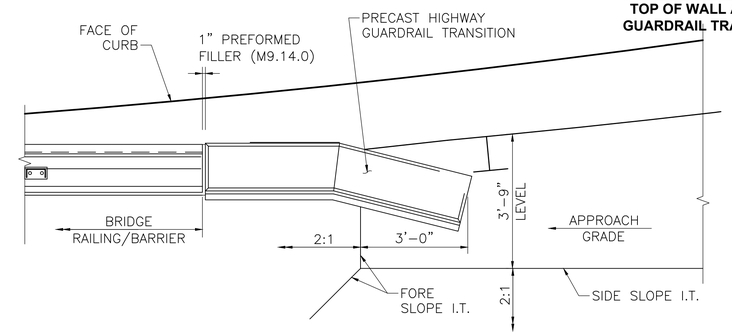

GRADING REQUIREMENTS PLAN

SCALE: 1/2" = 1'-0"

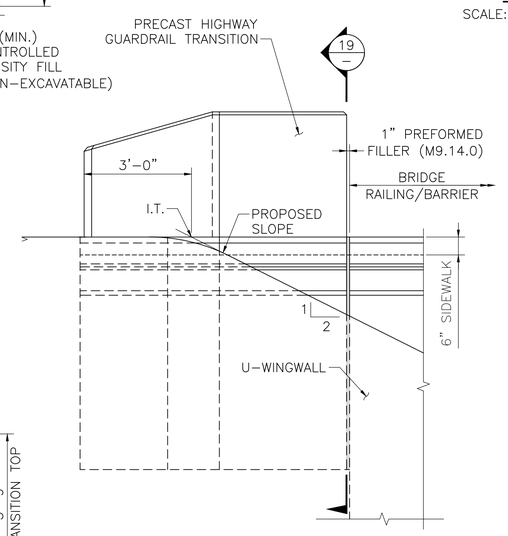

GRADING REQUIREMENTS ELEVATION

SCALE: 1/2" = 1'-0"

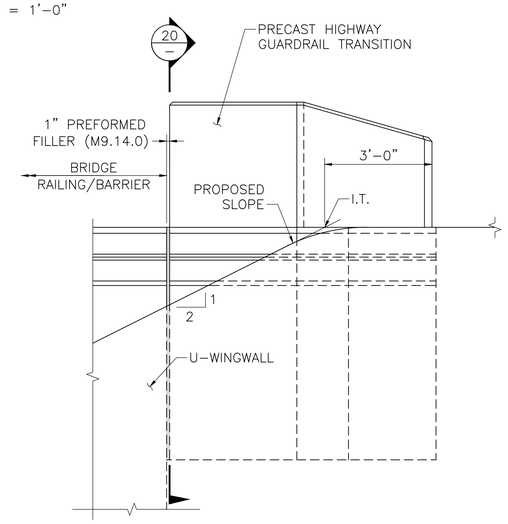

GRADING REQUIREMENTS ELEVATION

SCALE: 1/2" = 1'-0"

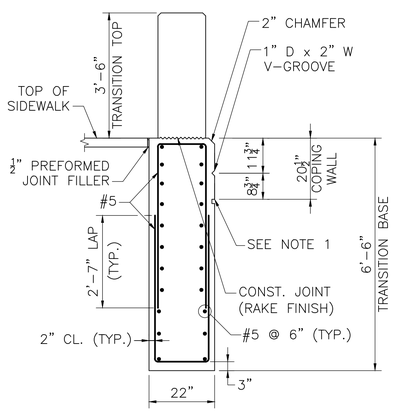

NOTES:

1. 1 1/2" H x 1" D GROOVE. ALIGN WITH GROOVE ABOVE GRANITE.
2. REINFORCEMENT OF THE TRANSITION TOP IS NOT SHOWN FOR CLARITY.

SECTION 16

SCALE: 1/2" = 1'-0"

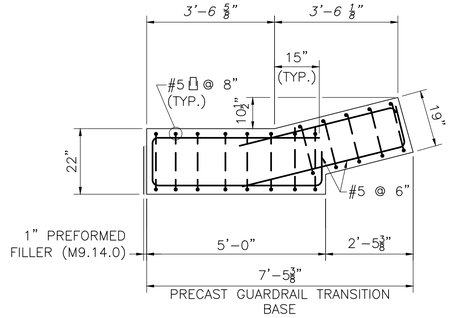

NOTE:

WINGWALL REINFORCEMENT AND STRIATIONS NOT SHOWN FOR CLARITY.

SECTION 17

SCALE: 1/2" = 1'-0"

NOTES:

1. PRECAST GUARDRAIL TRANSITION SHALL BE 5000 PSI, 3/4 IN, 685 HP CEMENT CONCRETE.
2. GRAVEL BORROW SHALL BE PLACED AND THOROUGHLY COMPACTED TO THE GRADE OF 3" (MIN.) BELOW THE INTENDED BOTTOM OF THE PRECAST GUARDRAIL TRANSITION BASE AND TO A HEIGHT OF 2'-0" (MIN.) ON ALL SIDES OF THE TRANSITION BASE TO FORM A TRENCH IN WHICH TO SET THE TRANSITION. WHERE NO GRAVEL BORROW IS REQUIRED BELOW THE BASE, IT SHALL BE PLACED ON UNDISTURBED SOIL.
3. CONTRACTOR SHALL SET THE PRECAST GUARDRAIL TRANSITION TO THE REQUIRED ELEVATION AND ALIGNMENT, AND BACKILL PRECAST GUARDRAIL TRANSITION WITH CONTROLLED DENSITY FILL (NON-EXCAVATABLE) TO THE ELEVATION SHOWN.

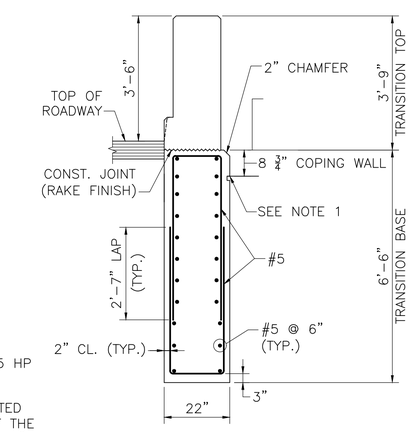

NOTES:

1. 1 1/2" H x 1" D GROOVE. ALIGN WITH GROOVE ABOVE GRANITE.
2. REINFORCEMENT OF THE TRANSITION TOP IS NOT SHOWN FOR CLARITY.

SECTION 18

SCALE: 1/2" = 1'-0"

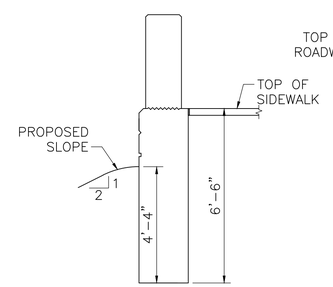

SECTION 19

SCALE: 3/8" = 1'-0"

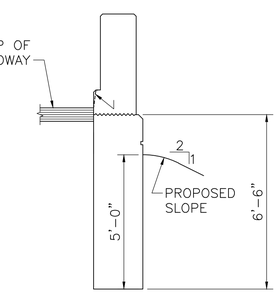

SECTION 20

SCALE: 3/8" = 1'-0"

xxx xx xxxx	ISSUED FOR CONSTRUCTION
DATE	
USE ONLY PRINTS OF LATEST DATE	

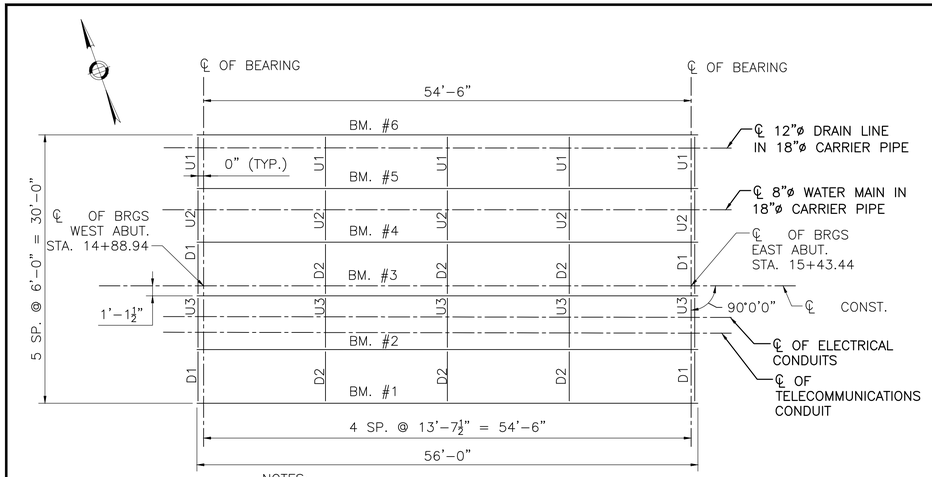

NOTES:
1. D1 = C12x20.7 (TYP. END DIAPHRAGM)
   D2 = C12x20.7 (TYP. INTERMEDIATE DIAPHRAGM)
   U1 = TYPICAL UTILITY SUPPORT AT SIDEWALK
   U2 = TYPICAL UTILITY SUPPORT
   U3 = TYPICAL UTILITY SUPPORT AT WATER MAIN
2. SEE SHEET 24 FOR DIAPHRAGM AND UTILITY SUPPORT DETAILS.
3. THE MAIN LOAD CARRYING MEMBERS ARE W24x162.
4. ALL STEEL SHALL CONFORM TO AASHTO M 270 GRADE 50W.

FRAMING PLAN
SCALE: ⅛" = 1'–0"

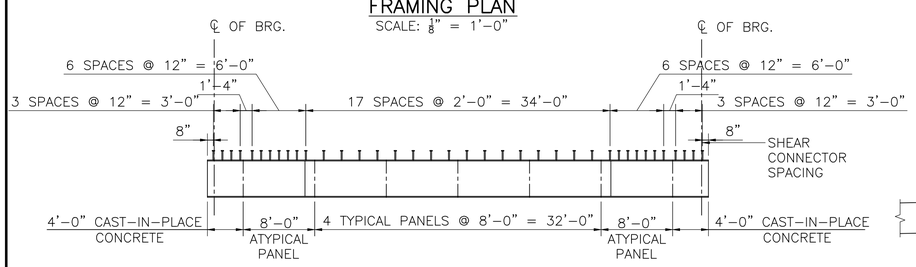

TYPICAL BEAM ELEVATION
NOT TO SCALE

CAMBER TABLE

BM. NO.		SPAN NO. 1										
		℄ BRG. ABUT.	0.1L	0.2L	0.3L	0.4L	0.5L	0.6L	0.7L	0.8L	0.9L	℄ BRG. ABUT./PIER
1	STEEL DL DEFLECTION	0	0.170	0.321	0.439	0.514	0.540	0.514	0.439	0.321	0.170	0
	CONC. DL DEFLECTION	0	0.238	0.449	0.615	0.720	0.756	0.720	0.615	0.449	0.238	0
	S.D.L. DEFLECTION	0	0.236	0.446	0.610	0.714	0.749	0.714	0.610	0.446	0.236	0
	ADDITIONAL CAMBER	0	0.068	0.135	0.203	0.270	0.338	0.270	0.203	0.135	0.068	0
	TOTAL CAMBER	0	0.712	1.351	1.867	2.218	2.383	2.218	1.867	1.351	0.712	0
2	STEEL DL DEFLECTION	0	0.173	0.327	0.448	0.525	0.551	0.525	0.448	0.327	0.173	0
	CONC. DL DEFLECTION	0	0.258	0.488	0.667	0.782	0.821	0.782	0.667	0.488	0.258	0
	S.D.L. DEFLECTION	0	0.099	0.183	0.251	0.301	0.309	0.301	0.251	0.183	0.099	0
	ADDITIONAL CAMBER	0	0.068	0.135	0.203	0.270	0.338	0.270	0.203	0.135	0.068	0
	TOTAL CAMBER	0	0.598	1.133	1.569	1.904	2.019	1.904	1.569	1.133	0.598	0
3	STEEL DL DEFLECTION	0	0.174	0.330	0.451	0.529	0.556	0.529	0.451	0.330	0.174	0
	CONC. DL DEFLECTION	0	0.262	0.496	0.679	0.795	0.835	0.795	0.679	0.496	0.262	0
	S.D.L. DEFLECTION	0	0.077	0.146	0.200	0.233	0.245	0.233	0.200	0.146	0.077	0
	ADDITIONAL CAMBER	0	0.068	0.135	0.203	0.270	0.338	0.270	0.203	0.135	0.068	0
	TOTAL CAMBER	0	0.581	1.107	1.533	1.827	1.974	1.827	1.533	1.107	0.581	0
4	STEEL DL DEFLECTION	0	0.174	0.329	0.450	0.527	0.553	0.527	0.450	0.329	0.174	0
	CONC. DL DEFLECTION	0	0.262	0.496	0.679	0.795	0.835	0.795	0.679	0.496	0.262	0
	S.D.L. DEFLECTION	0	0.157	0.298	0.408	0.478	0.502	0.478	0.408	0.298	0.157	0
	ADDITIONAL CAMBER	0	0.068	0.135	0.203	0.270	0.338	0.270	0.203	0.135	0.068	0
	TOTAL CAMBER	0	0.661	1.258	1.740	2.070	2.228	2.070	1.740	1.258	0.661	0
5	STEEL DL DEFLECTION	0	0.170	0.320	0.438	0.513	0.539	0.513	0.438	0.320	0.170	0
	CONC. DL DEFLECTION	0	0.258	0.488	0.668	0.783	0.882	0.783	0.668	0.488	0.258	0
	S.D.L. DEFLECTION	0	0.370	0.700	0.966	1.121	1.178	1.121	0.966	0.700	0.370	0
	ADDITIONAL CAMBER	0	0.068	0.135	0.203	0.270	0.338	0.270	0.203	0.135	0.068	0
	TOTAL CAMBER	0	0.866	1.643	2.275	2.687	2.937	2.687	2.275	1.643	0.866	0
6	STEEL DL DEFLECTION	0	0.165	0.312	0.427	0.500	0.525	0.500	0.427	0.312	0.165	0
	CONC. DL DEFLECTION	0	0.237	0.448	0.614	0.719	0.755	0.719	0.614	0.448	0.237	0
	S.D.L. DEFLECTION	0	0.552	0.972	1.331	1.559	1.637	1.559	1.331	0.972	0.552	0
	ADDITIONAL CAMBER	0	0.068	0.135	0.203	0.270	0.338	0.270	0.203	0.135	0.068	0
	TOTAL CAMBER	0	1.022	1.867	2.575	3.047	3.255	3.047	2.575	1.867	1.022	0

STEEL NOTES:

1. STRUCTURAL STEEL SHALL CONFORM TO AASHTO M270 GRADE 50W.
2. ALL DIMENSIONS ARE ON A HORIZONTAL PLANE.
3. WELD DETAILS, PROCEDURES, AND TESTING METHODS SHALL CONFORM TO THE AWS D1.5–(2015) AS MODIFIED BY AASHTO STANDARD SPECIFICATION FOR WELDING OF STRUCTURAL STEEL HIGHWAY BRIDGES UNLESS OTHERWISE NOTED.
4. THE STRUCTURAL STEEL FABRICATORS SHALL BE CERTIFIED UNDER THE AISC QUALITY CONTROL PROGRAM, CATEGORY III MAJOR STEEL BRIDGES.
5. FOR GROUNDING AND BONDING REQUIREMENTS OF THE STRUCTURAL STEEL REFER TO THE OCS PLANS SHEET NUMBERS 68 AND 69. EACH GIRDER IS TO BE BONDED TO THE GROUNDING SYSTEM IMMEDIATELY AFTER GIRDER INSTALLATION.
6. FOR GROUNDING AND BONDING REQUIREMENTS OF THE UTILITY CARRIER AND CASING PIPES REFER TO THE OCS PLANS SHEET NUMBERS 68 AND 69. CARRIER AND CASING PIPES ARE TO BE BONDED TO THE GROUNDING SYSTEM IMMEDIATELY AFTER INSTALLATION.

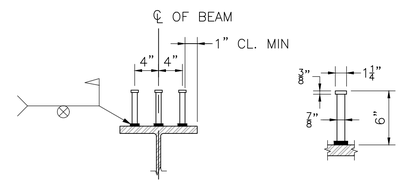

STUD SHEAR CONNECTOR
NOT TO SCALE

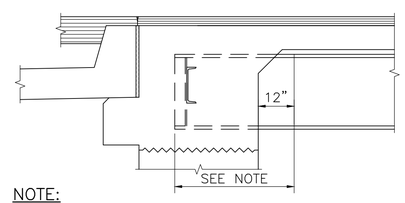

NOTE:

THE UNPAINTED WEATHERING STEEL STRINGER AND ATTACHED PLATES EMBEDDED IN THE ABUTMENT AND WITHIN 12" OF THE ABUTMENT FACE SHALL BE PAINTED IN ACCORDANCE WITH THE STANDARD SPECIFICATIONS. THE FINISH COAT COLOR SHALL MATCH COLOR CHIP NO. 30045 OF FEDERAL STANDARD 595A. THE STEEL DIAPHRAGM SHALL NOT BE PAINTED.

LIMITS OF PAINTED WEATHERING STEEL
SCALE: ½" = 1'–0"

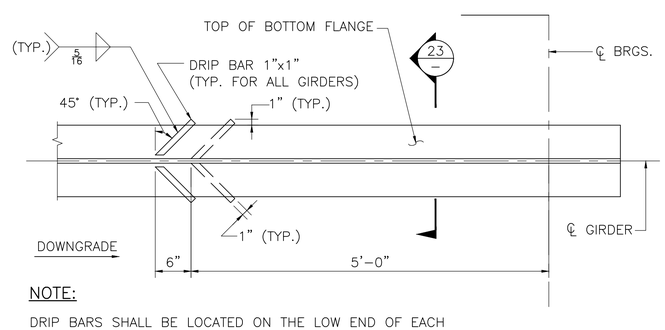

NOTE:

DRIP BARS SHALL BE LOCATED ON THE LOW END OF EACH SPAN FOR ALL GIRDERS

DRIP BAR DETAIL
SCALE: 1" = 1'–0"

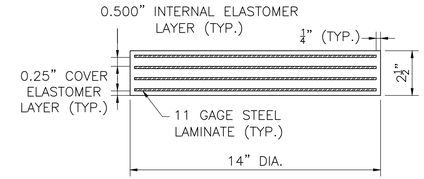

ELASTOMERIC BEARING PAD
NOT TO SCALE

NOTES:
1. ELASTOMER SHALL HAVE A SHEAR MODULUS OF 0.160 KSI.
2. STEEL LAMINATES SHALL CONFORM TO ASTM A 1011 GRADE 36.
3. THE COMPRESSIVE DESIGN LOAD ON THE BEARING PAD IS 123.5 KIPS. THE COMPRESSIVE DESIGN STRESS IS THE RESULT OF DIVIDING THE COMPRESSIVE DESIGN LOAD BY THE AREA OF THE PAD AND IS EQUAL TO 0.802 KSI.
4. ELASTOMERIC BEARING PAD SHALL NOT BE VULCANIZED TO THE SOLE PLATE.

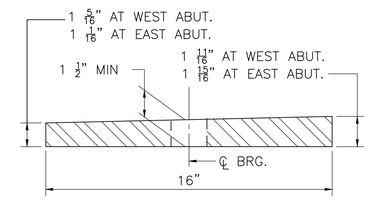

SOLE PLATE DETAIL
SCALE: 3" = 1'–0"

BEARING NOTES:
1. STEEL SOLE PLATE SHALL CONFORM TO AASHTO M 270 GRADE 36 AND SHALL BE HOT–DIP GALVANIZED.
2. CENTER THE ELASTOMERIC PAD UNDER THE SOLE PLATE DURING BEAM ERECTION.
3. BEAMS SHALL BE ERECTED WHEN THE AMBIENT TEMPERATURE IS BETWEEN 50 °F AND 77 °F. IF BEAMS ARE ERECTED AT OTHER AMBIENT TEMPERATURES, THEY WILL HAVE TO BE JACKED AND THE ELASTOMERIC BEARINGS RECENTERED WHEN THE TEMPERATURE RETURNS TO THAT RANGE.

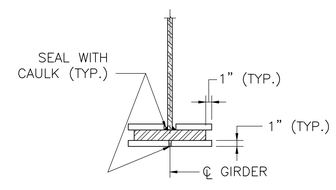

SECTION 23
SCALE: 1" = 1'–0"

SHARON
MASKWONICUT STREET

STATE	FED. AID PROJ. NO.	SHEET NO.	TOTAL SHEETS
MA	STP(BR–OFF)–003S(060)	38	86
PROJECT FILE NO.	608079		

FRAMING PLAN, BEARING DETAILS, AND TYPICAL BEAM DETAILS

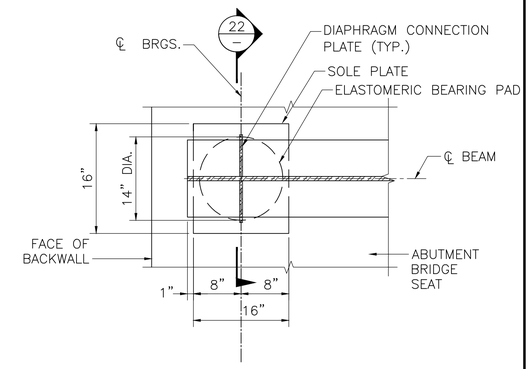

ELASTOMERIC BEARING PAD PLAN
SCALE: 1" = 1'–0"

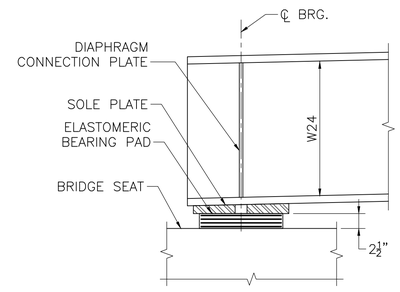

ELASTOMERIC BEARING PAD ELEVATION
SCALE: 1" = 1'–0"

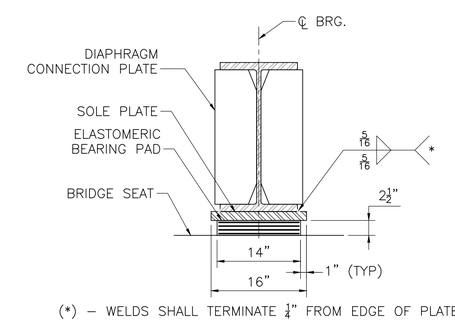

(*) – WELDS SHALL TERMINATE ¼" FROM EDGE OF PLATE.

SECTION 22
SCALE: 1" = 1'–0"

xxx xx xxxx	ISSUED FOR CONSTRUCTION
DATE	
USE ONLY PRINTS OF LATEST DATE	

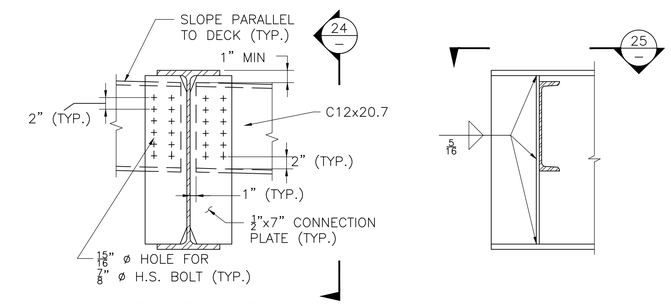

ELEVATION VIEW

SECTION 24

NOTE:

SEE CLIP DETAIL ON THIS SHEET

D1 – END DIAPHRAGM DETAILS

SCALE: 1" = 1'-0"

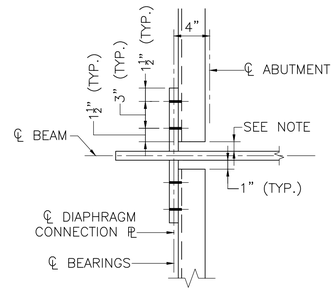

NOTE:

FLANGE OF CHANNEL MAY BE CLIPPED TO AVOID INTERFERENCE WITH WEB.

SECTION 25

SCALE: 1 1/2" = 1'-0"

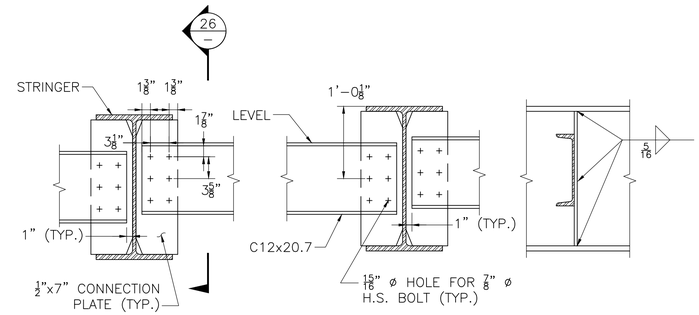

ELEVATION VIEW

SECTION 26

NOTE:

SEE CLIP DETAILS ON THIS SHEET.

D2 – INTERMEDIATE DIAPHRAGM DETAILS

SCALE: 1" = 1'-0"

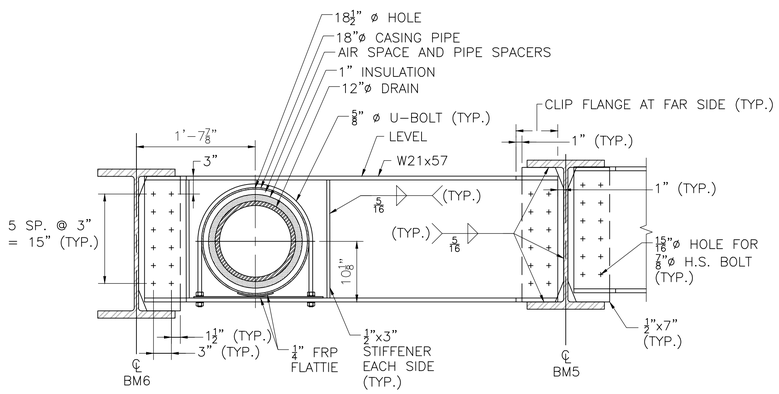

NOTE:

SEE DIAPHRAGM CONNECTION PLATE CLIP DETAILS ON THIS SHEET.

U1 – UTILITY SUPPORT AT END AND INTERMEDIATE DIAPHRAGMS

SCALE: 1" = 1'-0"

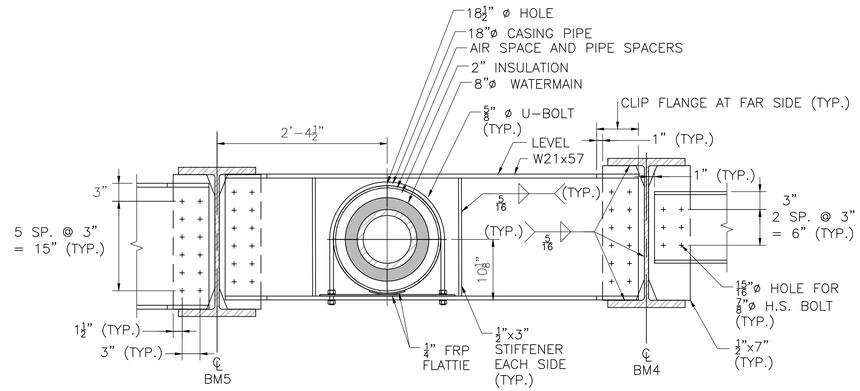

NOTE:

SEE DIAPHRAGM CONNECTION PLATE CLIP DETAILS ON THIS SHEET.

U2 – UTILITY SUPPORT AT END AND INTERMEDIATE DIAPHRAGMS

SCALE: 1" = 1'-0"

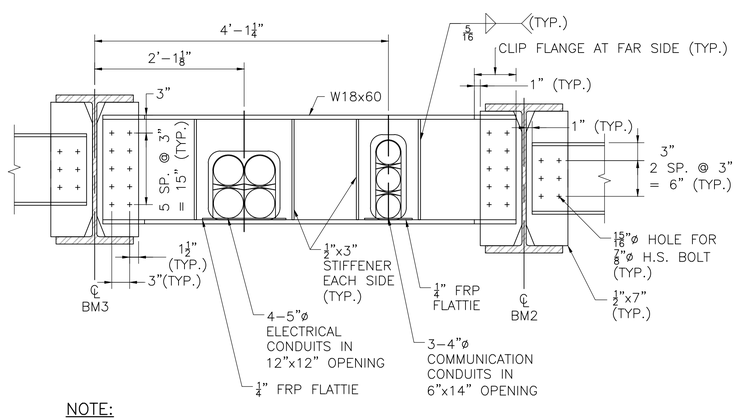

NOTE:

SEE DIAPHRAGM CONNECTION PLATE CLIP DETAILS ON THIS SHEET.

U3 – UTILITY SUPPORT AT END AND INTERMEDIATE DIAPHRAGMS

SCALE: 1" = 1'-0"

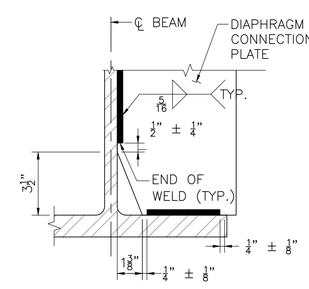

CLIP DETAIL

NOT TO SCALE

xxx xx xxxx	ISSUED FOR CONSTRUCTION
DATE	DESCRIPTION
USE ONLY PRINTS OF LATEST DATE	

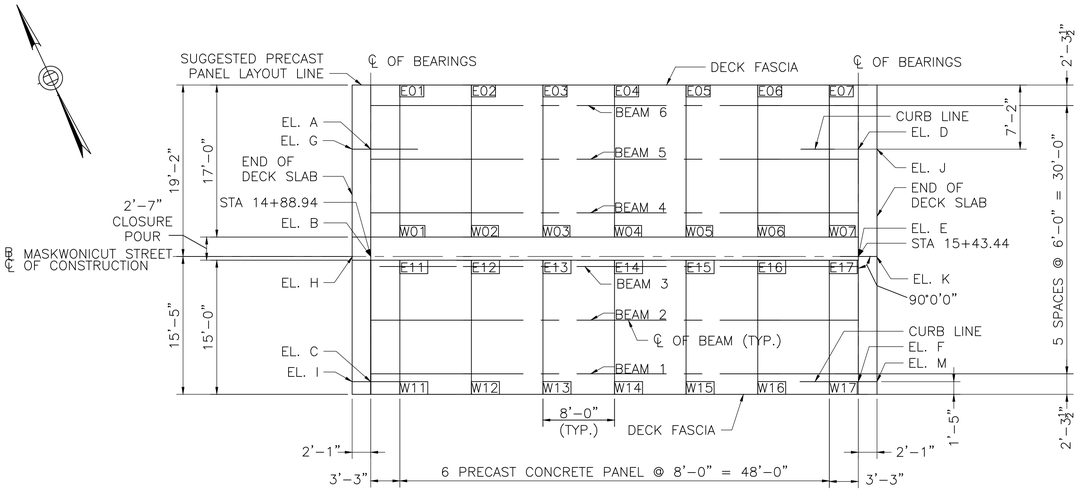

NOTES:
1. THE ACTUAL CONFIGURATION AND NUMBER OF THESE PANELS SHALL BE AS PER CONTRACTOR AND/OR PANEL MANUFACTURER.
2. ERECTION TOLERANCE IS ±1/4" IN ALL DIRECTIONS. MEASURE LAYOUT OF PANELS FROM A COMMON WORKING LINE.
3. STANDARD WIDTH OF PRECAST CONCRETE DECK PANEL IS 8'-0" NOMINAL AND 7'-11½" ACTUAL.

PRECAST CONCRETE DECK PANEL LAYOUT
SCALE: ⅛" = 1'-0"

DECK PANEL CORNER ELEVATIONS			
CORNER	STA	OFFSET	ELEVATIONS
E01	14+92.32	19.167' LT	216.95
E02	15+00.32	19.167' LT	217.26
E03	15+08.32	19.167' LT	217.57
E04	15+16.32	19.167' LT	217.88
E05	15+24.32	19.167' LT	218.20
E06	15+32.32	19.167' LT	218.50
E07	15+40.32	19.167' LT	218.82
E11	14+92.32	0.417' RT	217.32
E12	15+00.32	0.417' RT	217.64
E13	15+08.32	0.417' RT	217.95
E14	15+16.32	0.417' RT	218.26
E15	15+24.32	0.417' RT	218.57
E16	15+32.32	0.417' RT	218.88
E17	15+40.32	0.417' RT	219.20
W01	14+92.32	2.167' LT	217.29
W02	15+00.32	2.167' LT	217.60
W03	15+08.32	2.167' LT	217.91
W04	15+16.32	2.167' LT	218.22
W05	15+24.32	2.167' LT	218.54
W06	15+32.32	2.167' LT	218.84
W07	15+40.32	2.167' LT	219.16
W11	14+92.31	15.417' RT	217.02
W12	15+00.32	15.417' RT	217.34
W13	15+08.32	15.417' RT	217.65
W14	15+16.32	15.417' RT	217.96
W15	15+24.32	15.417' RT	218.27
W16	15+32.32	15.417' RT	218.58
W17	15+40.32	15.417' RT	218.90

TOP OF W.S./ CURB ELEVATION @ ℄ OF FRAMING		
LOCATION	TOP OF DECK	TOP OF W.S.
EL. A	216.97	217.22
EL. B	217.21	217.46
EL. C	216.93	217.18
EL. D	219.09	219.34
EL. E	219.33	219.58
EL. F	219.05	219.30
EL. G	216.88	217.13
EL. H	217.12	217.37
EL. I	216.84	217.09
EL. J	219.17	219.52
EL. K	219.41	219.66
EL. M	219.13	219.48

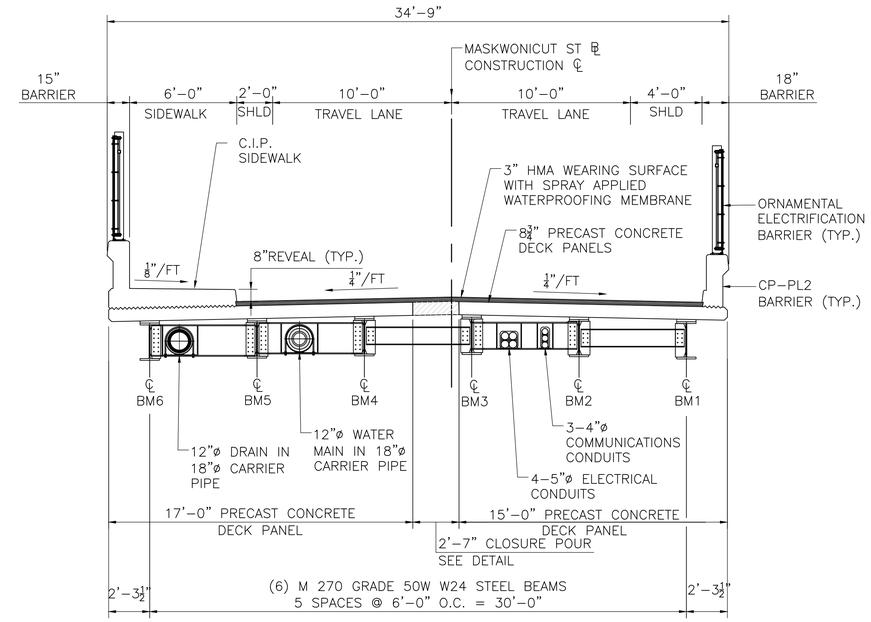

TRANSVERSE SECTION
SCALE: ¼" = 1'-0"

NOTES:
1. FOR GROUNDING AND BONDING REQUIREMENTS OF THE STRUCTURAL STEEL REFER TO THE OCS PLANS SHEET NUMBERS 68 AND 69. EACH GIRDER IS TO BE BONDED TO THE GROUNDING SYSTEM IMMEDIATELY AFTER GIRDER INSTALLATION.
2. FOR GROUNDING AND BONDING REQUIREMENTS OF THE UTILITY CARRIER AND CASING PIPES REFER TO THE OCS PLANS SHEET NUMBERS 68 AND 69. CARRIER AND CASING PIPES ARE TO BE BONDED TO THE GROUNDING SYSTEM IMMEDIATELY AFTER INSTALLATION.

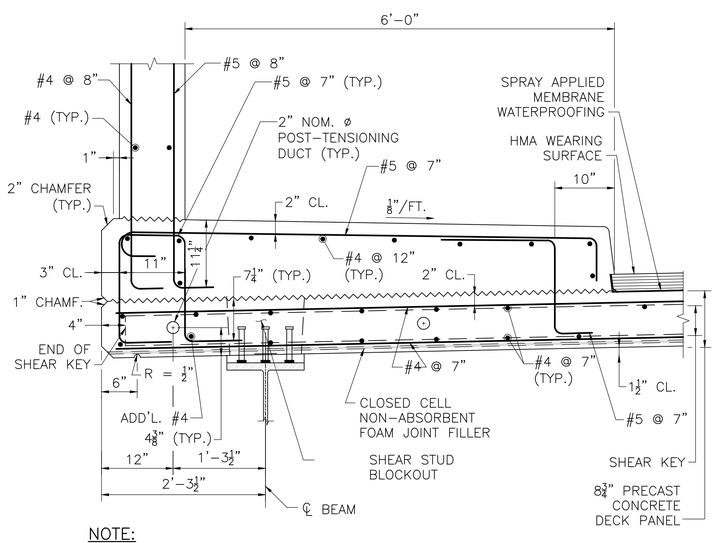

NOTE:
C.I.P. SIDEWALK AND CP-PL2 BARRIER SHALL BE 5000 PSI, ¾ IN., 685 HP CEMENT CONCRETE.

SECTION THRU SIDEWALK
SCALE: 1" = 1'-0"

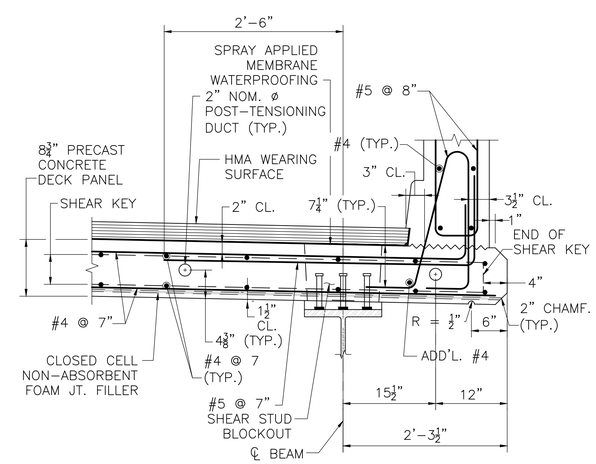

NOTE:
C.I.P. CP-PL2 BARRIER SHALL BE 5000 PSI, ¾ IN., 685 HP CEMENT CONCRETE.

SECTION THRU SAFETY CURB
SCALE: 1" = 1'-0"

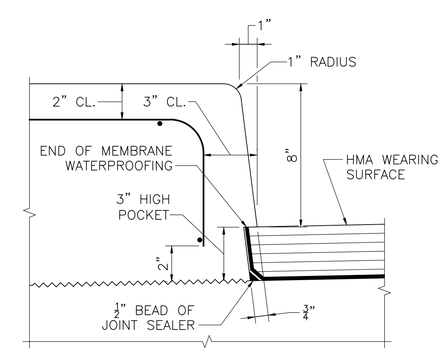

NOTES:
1. TURN MEMBRANE UP INTO 3" HIGH POCKET.
2. DIMENSIONS AT THE FACE OF CURB ARE THE SAME FOR THE SAFETY CURB.

FACE OF SIDEWALK CURB DETAILS
SCALE: 3" = 1'-0"

SHARON
MASKWONICUT STREET

STATE	FED. AID PROJ. NO.	SHEET NO.	TOTAL SHEETS
MA	–	40	86
PROJECT FILE NO. 608079			

PRECAST DECK PLAN

xxx xx xxxx	ISSUED FOR CONSTRUCTION
DATE	DESCRIPTION
USE ONLY PRINTS OF LATEST DATE	

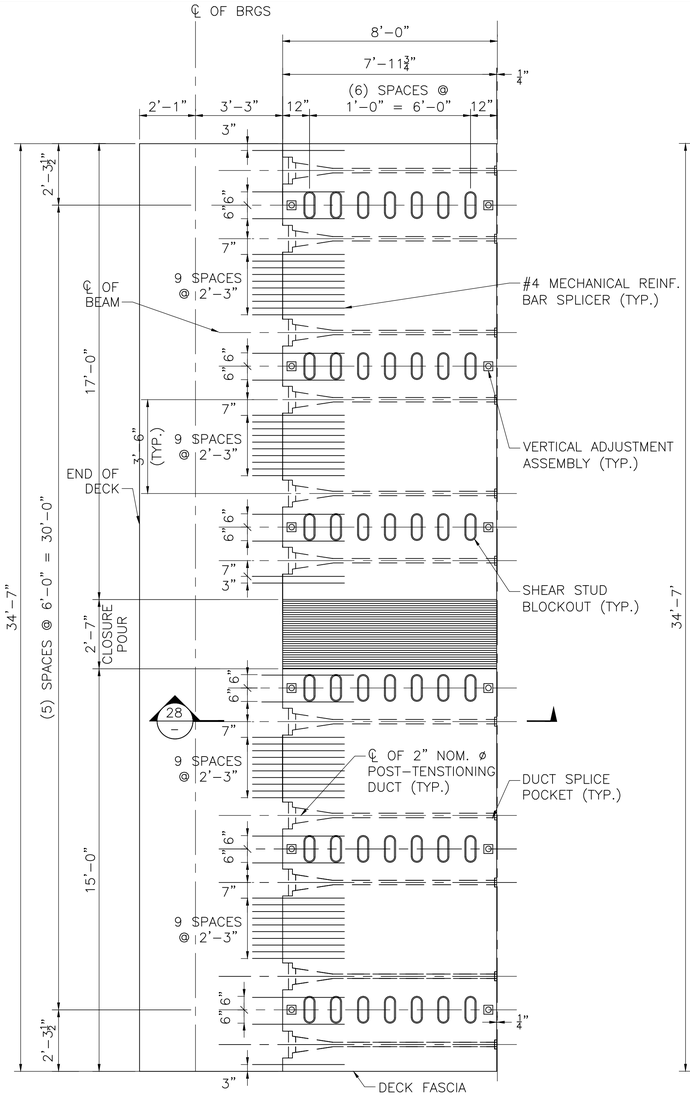

END PRECAST PANEL

SCALE: ⅜" = 1'-0"

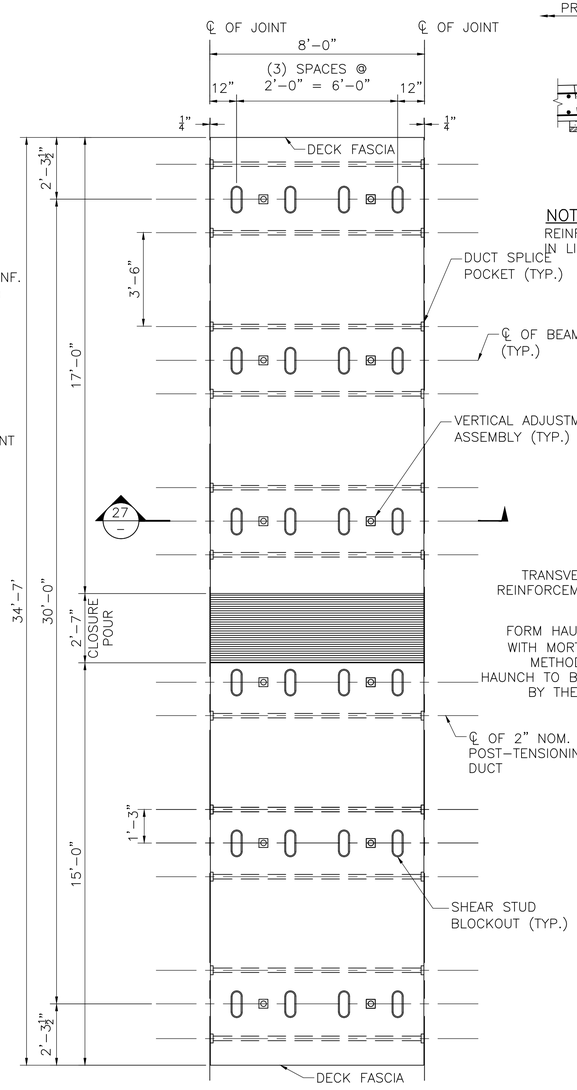

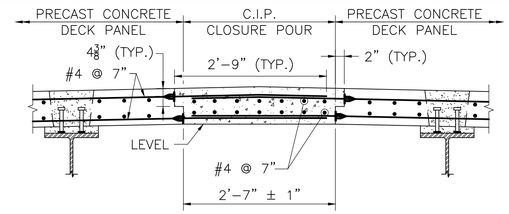

NOTE:
REINFORCING BARS EXTENDING FROM THE EDGE OF DECK MAY BE USED IN LIEU OF MECHANICAL REINFORCING BAR SPLICERS

CAST-IN-PLACE CLOSURE POUR DETAIL

SCALE: ¾" = 1'-0"

SHARON
MASKWONICUT STREET

STATE	FED. AID PROJ. NO.	SHEET NO.	TOTAL SHEETS
MA	–	41	86
PROJECT FILE NO. 608079			

PRECAST DECK DETAILS
1 OF 2

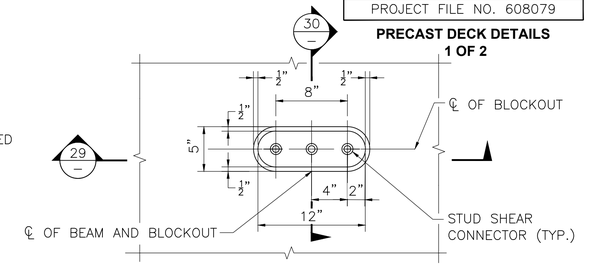

BLOCKOUT WITH STUD SHEAR CONNECTORS – PLAN

SCALE: 1½" = 1'-0"

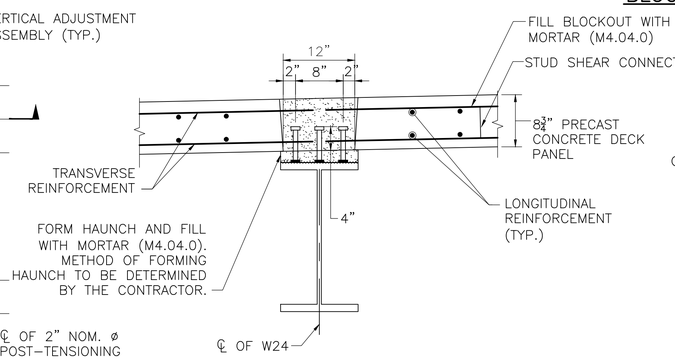

SECTION 29

SCALE: 1" = 1'-0"

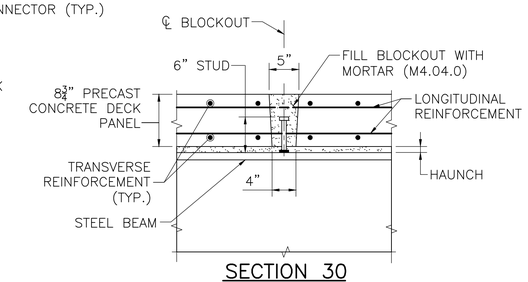

SECTION 30

SCALE: 1" = 1'-0"

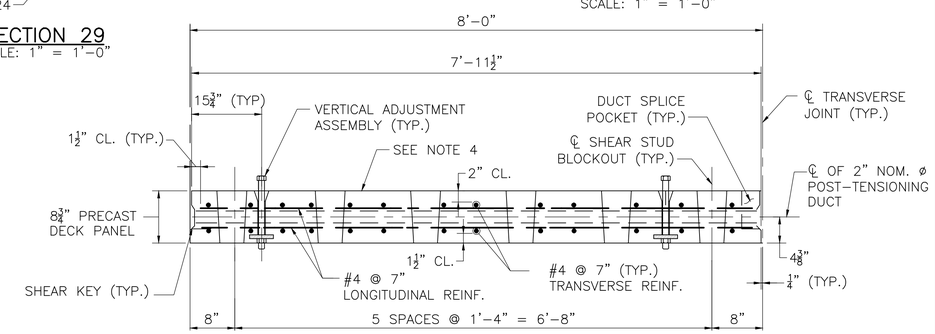

SECTION 27

SCALE: 1" = 1'-0"

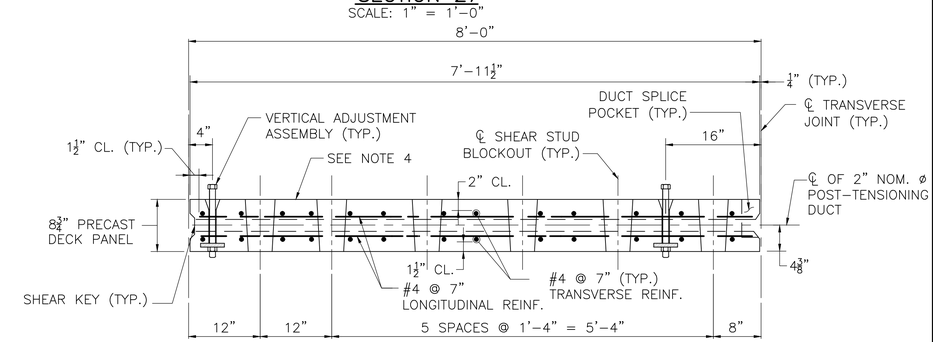

SECTION 28

SCALE: 1" = 1'-0"

NOTES:

1. FABRICATOR SHALL DESIGN THE LIFTING DEVICES AND SHALL DETERMINE THEIR REQUIRED NUMBER AND LOCATIONS, WHICH SHALL BE PROVIDED ON THE SHOP DRAWINGS. DESIGN CALCULATIONS OF THE LIFTING DEVICES WITH ALL SUPPORTING DESIGN INFORMATION (CHARTS, TABLES, ETC.) SHALL BE SUBMITTED TO THE ENGINEER FOR APPROVAL.
2. A MINIMUM OF 2 VERTICAL ADJUSTMENT ASSEMBLIES ARE REQUIRED AT CENTERLINE OF EACH BEAM.

TYPICAL PRECAST PANEL

SCALE: ⅜" = 1'-0"

NOTES:

1. PRECAST CONCRETE DECK PANELS SHALL BE 4000 PSI, ¾ IN., 585 HP CEMENT CONCRETE. SUBSTITUTIONS OF OTHER MIX DESIGNS WILL NOT BE ALLOWED
2. LONGITUDINAL REINFORCEMENT SHALL BE PLACED PARALLEL TO THE ℄ OF CONSTRUCTION. TRANSVERSE (PRIMARY) REINFORCEMENT SHALL BE PLACED PERPENDICULAR TO ℄ OF THE PANEL.
3. ALL REINFORCEMENT SHALL BE EPOXY COATED.
4. THE FINISHED SURFACE OF PRECAST CONCRETE DECK PANELS SHALL BE PREPARED IN ACCORDANCE WITH THE REQUIREMENTS OF THE SPRAY APPLIED MEMBRANE.

CAST-IN-PLACE CLOSURE POUR NOTES:

1. THE EDGE SURFACE OF THE PRECAST CONCRETE DECK PANELS SHALL BE BLAST CLEANED AND WETTED WITH CLEAN WATER, IMMEDIATELY PRIOR TO PLACING CLOSURE POUR CONCRETE.
2. CLOSURE POUR CONCRETE SHALL BE PLACED AFTER LONGITUDINAL POST-TENSIONING IS COMPLETED.
3. CLOSURE POUR CONCRETE SHALL BE 4000 PSI, ¾ IN., 585 HP CEMENT CONCRETE.

xxx xx xxxx	ISSUED FOR CONSTRUCTION
DATE	DESCRIPTION
USE ONLY PRINTS OF LATEST DATE	

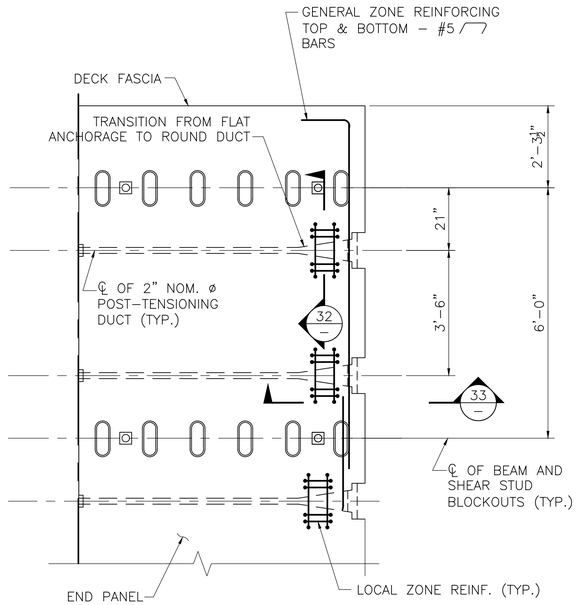

NOTE:

LOCAL ZONE REINFORCING TO BE DESIGNED BY THE CONTRACTOR.

END ANCHORAGE DETAILS FOR POST–TENSIONING

SCALE: ½" = 1'–0"

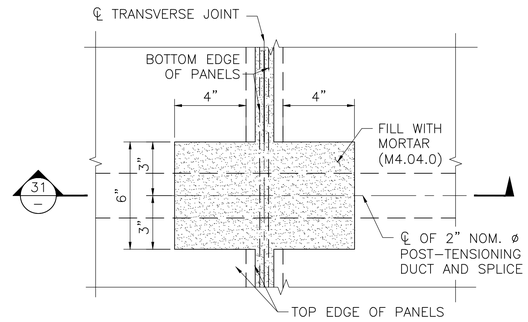

POST–TENSIONING DUCT CONNECTION – PLAN

SCALE: 3" = 1'–0"

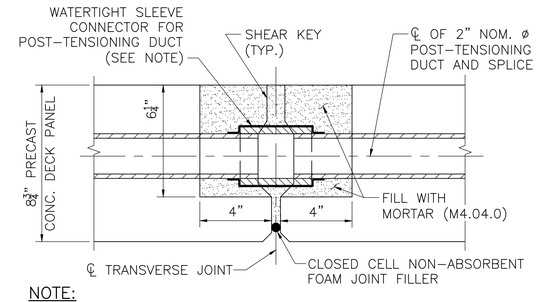

NOTE:

IT IS OF EXTREME IMPORTANCE TO MAKE THESE POST–TENSIONING DUCT CONNECTIONS 100% WATERTIGHT IN ORDER TO PREVENT MORTAR ENTERING THE POST–TENSIONING DUCTS WHEN IT IS PLACED IN THE TRANSVERSE JOINTS, AS WELL AS TO AVERT MORTAR FROM ESCAPING THE DUCTS DURING THEIR SUBSEQUENT GROUTING WITH MORTAR.

SECTION 31

SCALE: 3" = 1'–0"

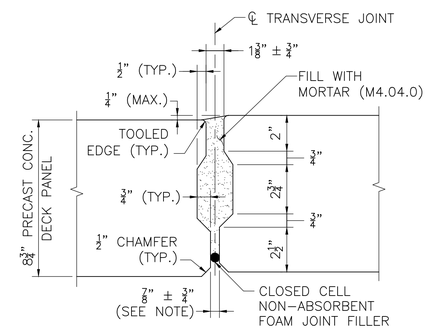

NOTE:

VARIATION IN JOINT WIDTH TO ACCOMMODATE FABRICATION TOLERANCES WHEN ERECTING PANELS.

SHEAR KEY DETAILS

SCALE: 3" = 1'–0"

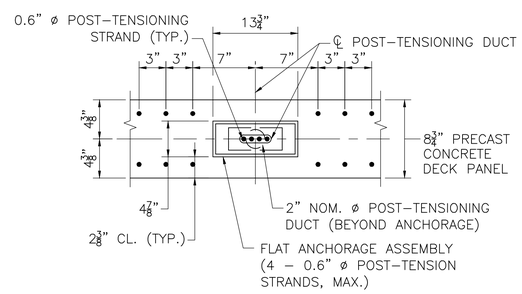

SECTION 32

SCALE: 1½" = 1'–0"

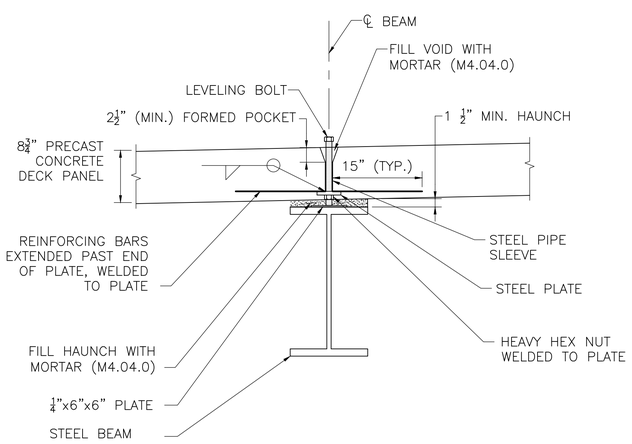

NOTE:

VERTICAL ADJUSTMENT ASSEMBLY SHALL BE DESIGNED BY THE CONTRACTOR.

VERTICAL ADJUSTMENT ASSEMBLY

SCALE: 1" = 1'–0"

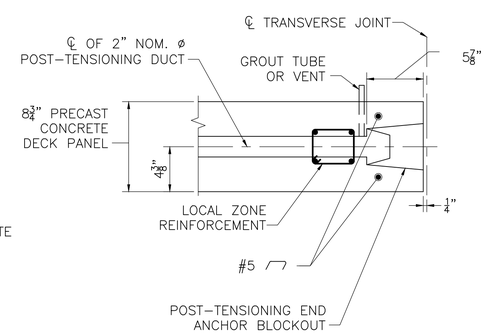

SECTION 33

SCALE: 1½" = 1'–0"

DECK PANEL CONSTRUCTION SEQUENCE NOTES:

1. IF REQUIRED, FULLY BRACE BEAMS PRIOR TO PLACING PANELS.
2. PLACE PANELS ON BEAMS WITHIN THE SPECIFIED TOLERANCES. THE TOLERANCE BETWEEN THE TRANSVERSE JOINTS SHALL BE USED TO ACCOUNT FOR FABRICATION AND ERECTION TOLERANCES.
3. ADJUST PRECAST PANELS TO GRADE BY USING VERTICAL ADJUSTMENT ASSEMBLIES. TORQUE ALL LEVELING BOLTS TO WITHIN 15% OF EACH OTHER TO PROVIDE PROPER DISTRIBUTION OF DEAD LOADS.
4. INSTALL POST–TENSIONING STRANDS LOOSE IN POST–TENSIONING DUCTS AND SEAL DUCT SPLICES.
5. PLACE MORTAR (M4.04.0) IN TRANSVERSE JOINTS ONLY.
6. STRESS POST–TENSIONING STRANDS ONLY AFTER MORTAR (M4.04.0) IN TRANSVERSE JOINTS ATTAINS A MINIMUM COMPRESSIVE STRENGTH TWO TIMES THAT REQUIRED BY THE APPROVED CALCULATIONS IN THE ASSEMBLY PLAN.
7. GROUT POST–TENSIONING DUCTS.
8. INSTALL SHEAR STUDS IN VOIDS/BLOCKOUTS.
9. FORM BEAM HAUNCHES.
10. GROUT SHEAR CONNECTOR POCKETS AND HAUNCH WITH MORTAR (M4.04.0).
11. REMOVE VERTICAL ADJUSTMENT ASSEMBLIES, LIFTING DEVICE HARDWARE AND GROUT VOIDS AND HAND HOLES WITH MORTAR (M4.04.0).
12. CAST CLOSURE POURS.
13. SEE SHEET 2 FOR SUGGESTED CONSTRUCTION SEQUENCE.

POST–TENSIONING SYSTEM MATERIALS:

1. PRESTRESSING STRAND USED IN THE POST–TENSIONING SYSTEM SHALL BE 0.6" DIA. GRADE 270 LOW RELAXATION STRANDS CONFORMING TO AASHTO M203.
2. USE MAXIMUM OF 4 STRANDS PER 2" NOM. ø POST–TENSIONING DUCT.
3. FLAT ANCHORAGE ASSEMBLY SHALL BE GALVANIZED. LOCAL ZONE REINFORCEMENT SHALL BE EPOXY COATED. STRAND GRIPPING WEDGES SHALL NOT BE COATED.
4. GROUT USED FOR HAUNCHES, TRANSVERSE SHEAR KEYS, VERTICAL ADJUSTMENT ASSEMBLY VOIDS, AND HAND HOLES FOR DUCT CONNECTIONS SHALL BE MORTAR (M4.04.0)
5. GROUT FOR POST–TENSIONING DUCTS SHALL BE A CEMENTITOUS, PRE–BAGGED, NON–SHRINK GROUT SPECIFICALLY FORMULATED FOR POST TENSIONING DUCTS.

DESIGN OF POST–TENSIONING:

1. THE PLANS DETAIL A POST–TENSIONING SYSTEM THAT IS DESIGNED TO PROVIDE A UNIFORM NET FINAL COMPRESSIVE STRESS OF 250 PSI ACROSS THE TRANSVERSE DECK JOINTS. THIS MINIMUM STRESS SHALL BE PROVIDED AFTER LOSSES DUE TO ELASTIC SHORTENING, DUCT FRICTION, WOBBLE AND ANCHORAGE SET. THE DETAILS ARE BASED ON THE FOLLOWING MATERIAL PROPERTIES AND PARAMETERS:
   – FRICTION AND WOBBLE COEFFICIENT = .0002
   – ANCHORAGE SET = .25 INCHES
   – THE AREA OF CLOSURE POUR CONCRETE IS NOT INCLUDED IN THE CALCULATION OF THE NET PRESTRESS FORCE.
2. THE DESIGN DETAILED ON THE PLANS RESULTS IN AN ESTIMATED JACKING FORCE OF 105 KIPS PER DUCT (AFTER ANCHORAGE SET).
3. THE CONTRACTOR SHALL DESIGN THE FINAL POST–TENSIONING SYSTEM BASED ON THE FRICTION, WOBBLE, AND ANCHORAGE SET ACCORDING TO THE ACTUAL MATERIALS THAT ARE PROPOSED. MINOR CHANGES TO THE SYSTEM CAN BE MADE PROVIDED THAT THE FINAL NET COMPRESSIVE STRESS AFTER LOSSES IS EQUAL TO OR GREATER THAN 250 PSI.
4. THE DESIGN OF THE POST–TENSIONING SYSTEM SHALL INCLUDE THE DESIGN OF THE LOCAL ZONE REINFORCING REINFORCMENT BEHIND THE ANCHORAGE PLATE AND ANCHORAGE ASSEMBLY. THE LOCAL ZONE REINFORCEMENT SHALL BE DESIGNED IN ACCORDANCE WITH THE LATEST EDITION OF THE AASHTO LRFD BRIDGE DESIGN SPECIFICATIONS.
5. THE SYSTEM DESIGN SHALL INCLUDE A SEQUENCE OF STRESSING TO ENSURE THAT THE STRESSING OPERATION DOES NOT PERMIT MORE THAN 12.5% OF THE PRESTRESSING FORCE TO BE ECCENTRIC AT ANY TIME. STRESSING SEQUENCE SHALL BE SUBMITTED TO THE ENGINEER FOR APPROVAL PRIOR TO COMMENCEMENT OF WORK.
6. DECK PANELS MUST BE ALLOWED TO SLIDE ON BEAMS DURING POST–TENSIONING.
7. AT THE CONCLUSION OF THE STRESSING, QUALIFIED PERSONNEL SHALL PREPARE AND SUBMIT A STRESSING REPORT BASED ON ACTUAL MATERIAL PROPERTIES USED ON SITE TO THE ENGINEER FOR APPROVAL.

DATE	DESCRIPTION
xxx xx xxxx	ISSUED FOR CONSTRUCTION
USE ONLY PRINTS OF LATEST DATE	

SHARON
MASKWONICUT STREET

STATE	FED. AID PROJ. NO.	SHEET NO.	TOTAL SHEETS
MA	–	43	86
PROJECT FILE NO.	608079		

END DIAPHRAGM DETAILS

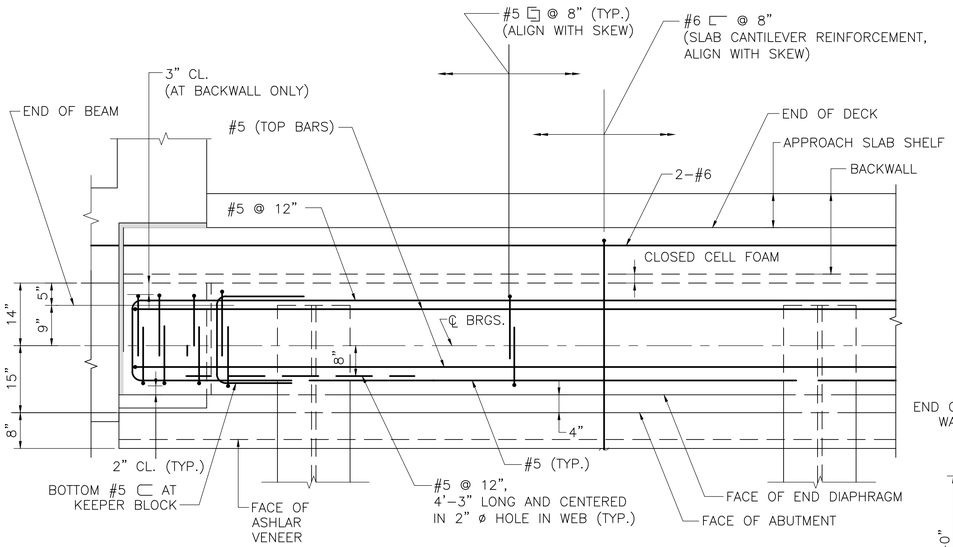

END DIAPHRAGM PLAN

SCALE: $\frac{3}{4}$" = 1'–0"

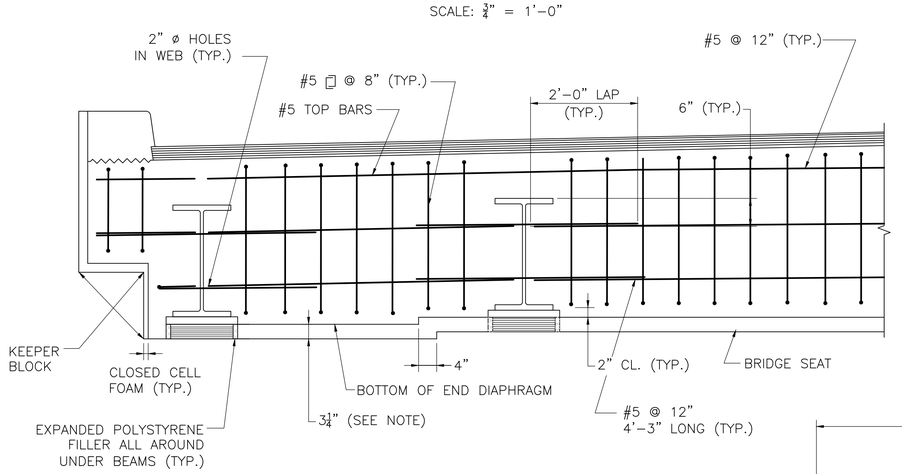

NOTE:
CONTRACTOR MAY USE EXPANDED POLYSTYRENE FILLER OR A REMOVABLE FORM TO FORM THE BOTTOM OF THE END DIAPHRAGM.

END DIAPHRAGM ELEVATION

SCALE: $\frac{3}{4}$" = 1'–0"

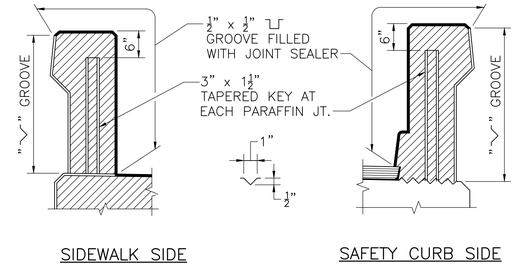

PARAFFIN JOINT DETAILS

SCALE: $\frac{3}{4}$" = 1'–0"

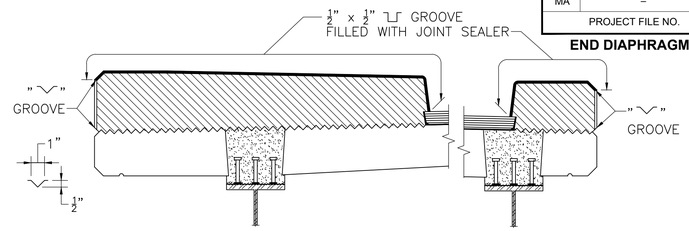

PARAFFIN JOINT DETAILS

SCALE: $\frac{3}{4}$" = 1'–0"

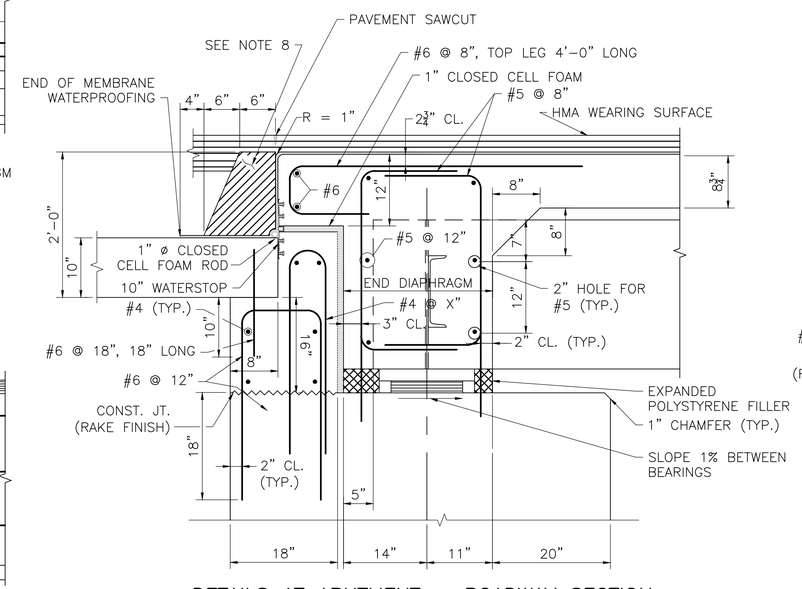

DETAILS AT ABUTMENT – ROADWAY SECTION

SCALE: 1" = 1'–0"

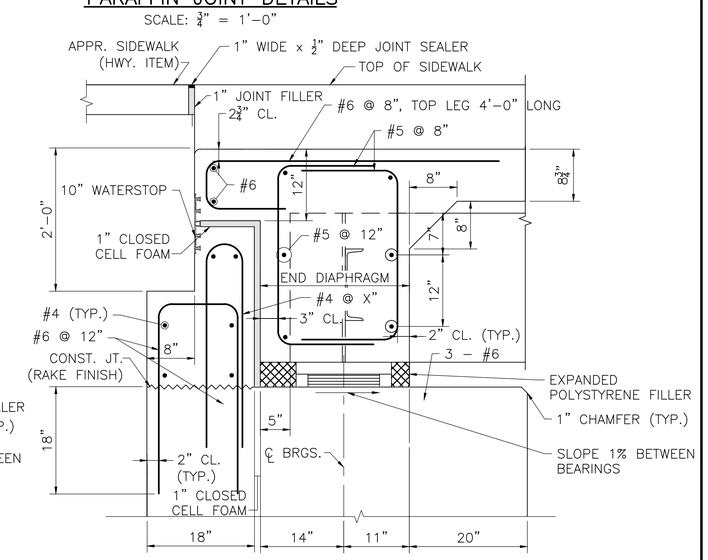

DETAILS AT ABUTMENT – SIDEWALK SECTION

SCALE: 1" = 1'–0"

ROADWAY/SIDEWALK SECTION NOTES:

1. ALL REINFORCEMENT SHOWN IN THIS DETAIL SHALL BE COATED EXCEPT FOR THE APPROACH SLAB REINFORCEMENT.
2. ALL BACKWALL CONCRETE ABOVE THE CONSTRUCTION JOINT LOCATED AT THE BRIDGE SEAT SHALL BE 4000 PSI, $\frac{3}{4}$ IN, 610 CEMENT CONCRETE. THE CONSTRUCTION JOINT SHALL BE GIVEN A RAKE FINISH WITH A $\frac{1}{4}$" MINIMUM AMPLITUDE.
3. TOP OF BACKWALL SHALL BE TROWELED SMOOTH PARALLEL TO THE PROFILE GRADE.
4. THE BACKWALL, KEEPER BLOCK, AND CURTAIN WALL CONCRETE MUST BE PLACED AND SUFFICIENTLY CURED PRIOR TO PLACING THE END DIAPHRAGM CONCRETE.
5. THE END DIAPHRAGM CONCRETE SHALL BE 4000 PSI, $\frac{3}{4}$ IN, 585 HP CEMENT CONCRETE AND SHALL BE PLACED MONOLITHICALLY WITH THE DECK.
6. PRIOR TO PLACING THE END DIAPHRAGM CONCRETE, CLOSED CELL FOAM OF THE SPECIFIED THICKNESSES SHALL BE ATTACHED WITH ADHESIVE TO ALL SURFACES OF THE BACKWALL, KEEPER BLOCKS, AND CURTAIN WALLS AS SHOWN ON THE PLANS. EXPANDED POLYSTYRENE FILLER SHALL BE PLACED UNDER THE BEAM BOTTOM FLANGE AND THE BOTTOM OF THE END DIAPHRAGM SHALL BE FORMED AS SPECIFIED. THE CONTRACTOR SHALL INSURE THAT ALL ABUTMENT CONCRETE IS PROPERLY LINED. END DIAPHRAGM CONCRETE MUST NOT COME IN DIRECT CONTACT WITH ABUTMENT CONCRETE.
7. DRAPE MEMBRANE WATERPROOFING OVER CLOSED CELL FOAM BACKER ROD.
8. PROTECTIVE COURSE TO BE SUPERPAVE BRIDGE PROTECTIVE COARSE (SPC–B–12.5), PLACED IN 2" LAYERS AND COMPACTED WITH A MECHANICAL HAND–GUIDED TAMPER WITH 12 HOURS AFTER PLACING MEMBRANE WATERPROOFING.

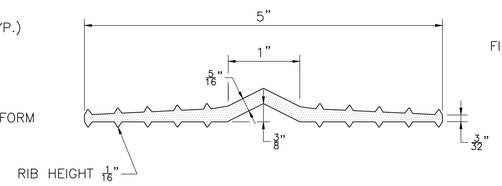

5" WATERSTOP

NOT TO SCALE

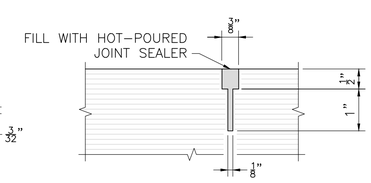

PAVEMENT SAWCUT DETAIL

NOT TO SCALE

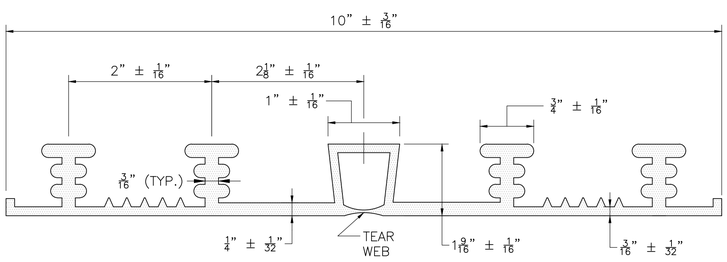

10" WATERSTOP

NOT TO SCALE

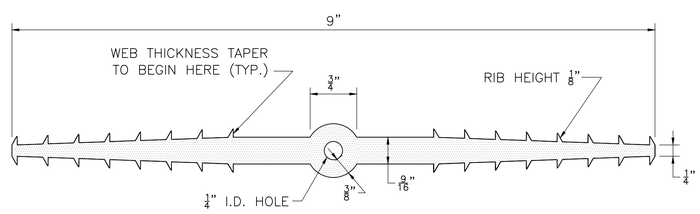

9" WATERSTOP

NOT TO SCALE

xxx xx xxxx	ISSUED FOR CONSTRUCTION
DATE	
USE ONLY PRINTS OF LATEST DATE	

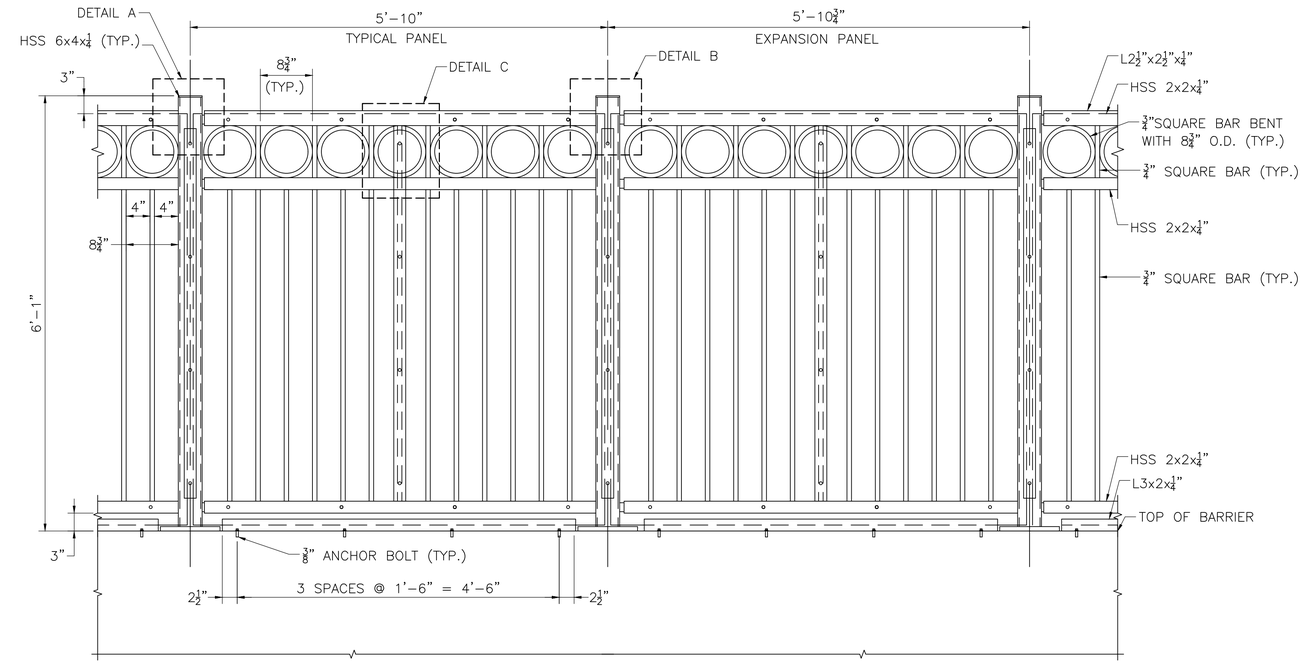

ELEVATION
SCALE: 1" = 1'-0"

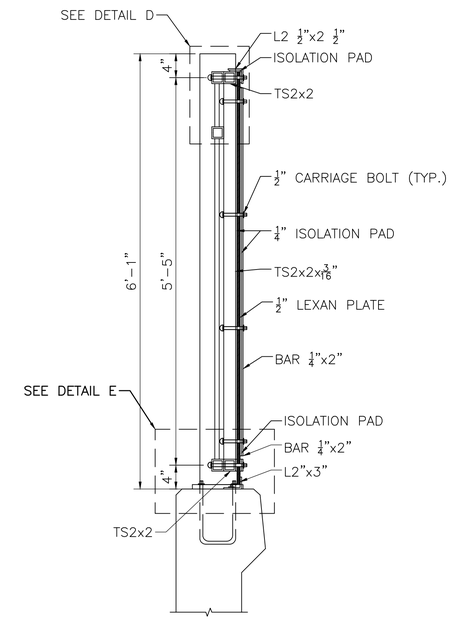

SECTION 34
SCALE: 1" = 1'-0"

SHARON
MASKWONICUT STREET

STATE	FED. AID PROJ. NO.	SHEET NO.	TOTAL SHEETS
MA	–	44	86
PROJECT FILE NO.	608079		

ORNAMENTAL ELECTRIFICATION BARRIER

NOTES:

1. LEXAN SHALL BE MRIO SHEET (CLEAR)
2. ALL BOLT HOLES IN LEXAN SHALL BE FILLED WITH RUBBER GROMMETS.
3. TOPS AND BOTTOMS OF LEXAN PLATES TO BE PARALLEL TO FENCE RAILS. SIDES OF PLATES TO BE VERTICAL.
4. TUBING SHALL CONFORM TO ASTM A500 GRADE C. BARS SHALL CONFORM TO AASHTO M270 GRADE 36.
5. STRUCTURAL STEEL SHALL BE GALVANIZED AND PAINTED BY THE GALVANIZER FOR ORNAMENTAL ELECTRIFICATION BARRIER. TOUCH UP AND REPAIR OF THE FINISH BY THE CONTRACTOR SHALL CONFORM TO THE REQUIREMENTS OF THE SPECIAL PROVISIONS FOR ORNAMENTAL ELECTRIFICATION BARRIER.
6. SEE SHEETS 71 AND 72 FOR GROUNDING AND BONDING REQUIREMENTS.
7. BOTTOM OF POST BASE PLATE TO BE SET ON A ⅛" RUBBER-COTTON DUCK BEARING PAD (M9.16.1).
8. ANCHOR CAGE SHALL BE PREQUALFIED BY THE MANUFACTURER AS CAPABLE OF DEVELOPING 40,000 POUNDS OF TENSION ON TWO BOLTS AND 20,000 POUNDS SHEAR FORCE ON FOUR BOLTS IN 4000 PSI CONCRETE WITH 3" MIN. EDGE DISTANCE.
9. POSTS TO BE SET PLUMB.
10. TUBING SHALL CONFORM TO ASTM A500 GRADE C.
11. BASE PLATES AND BARS SHALL CONFORM TO ASTM A449.
12. FENCE SHALL BE GALVANIZED AND PAINTED BY THE GALVANIZER.
13. FOR FENCE POST LAYOUT, SEE SHEET 13 OF 31.

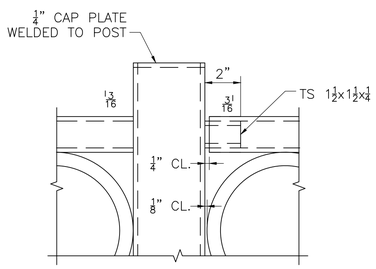

DETAIL A
SCALE: 3" = 1'-0"

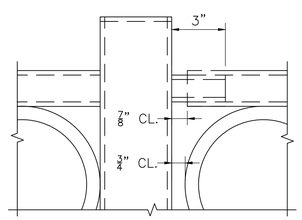

DETAIL B
SCALE: 3" = 1'-0"

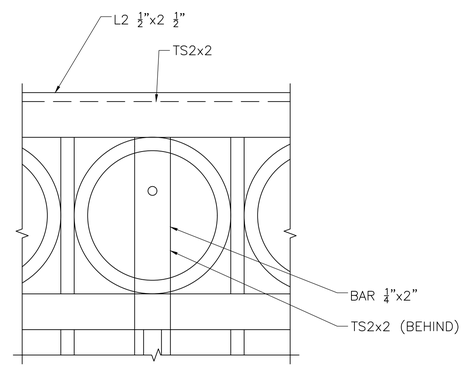

DETAIL C
SCALE: 3" = 1'-0"

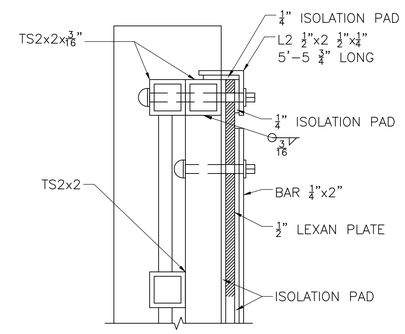

DETAIL D
SCALE: 3" = 1'-0"

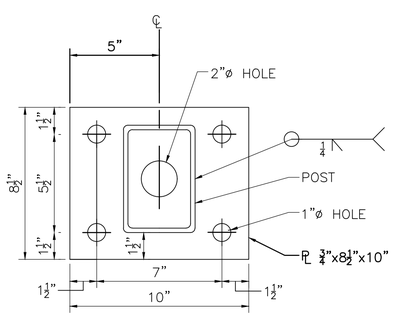

BASE PLATE DETAIL
SCALE: 3" = 1'-0"

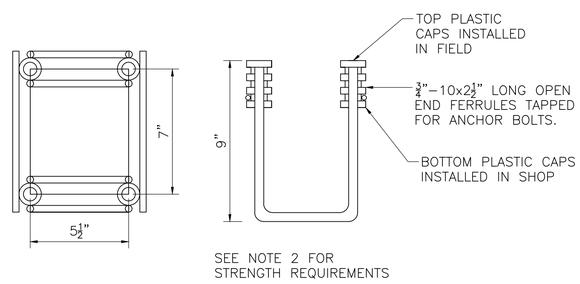

ANCHOR CAGE
SCALE: 3" = 1'-0"

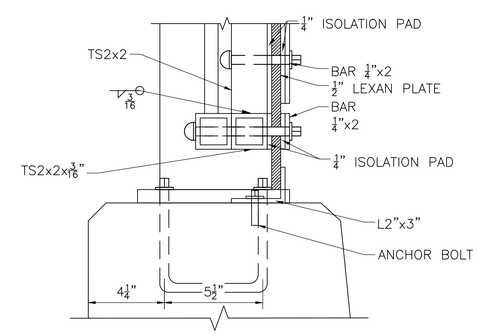

DETAIL E
SCALE: 3" = 1'-0"

xxx xx xxxx	ISSUED FOR CONSTRUCTION
DATE	
USE ONLY PRINTS OF LATEST DATE	

SHARON
MASKWONICUT STREET

STATE	FED. AID PROJ. NO.	SHEET NO.	TOTAL SHEETS
MA	–	45	86
PROJECT FILE NO.	608079		

HANDRAIL DETAILS

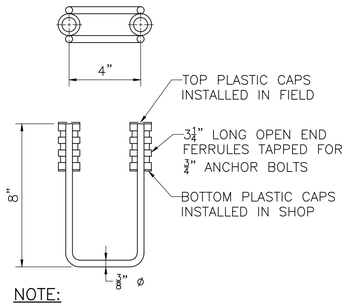

NOTE:
GALVANIZED OR ELECTROPLATE FINISH.

ANCHOR CAGE
SCALE: 3" = 1'–0"

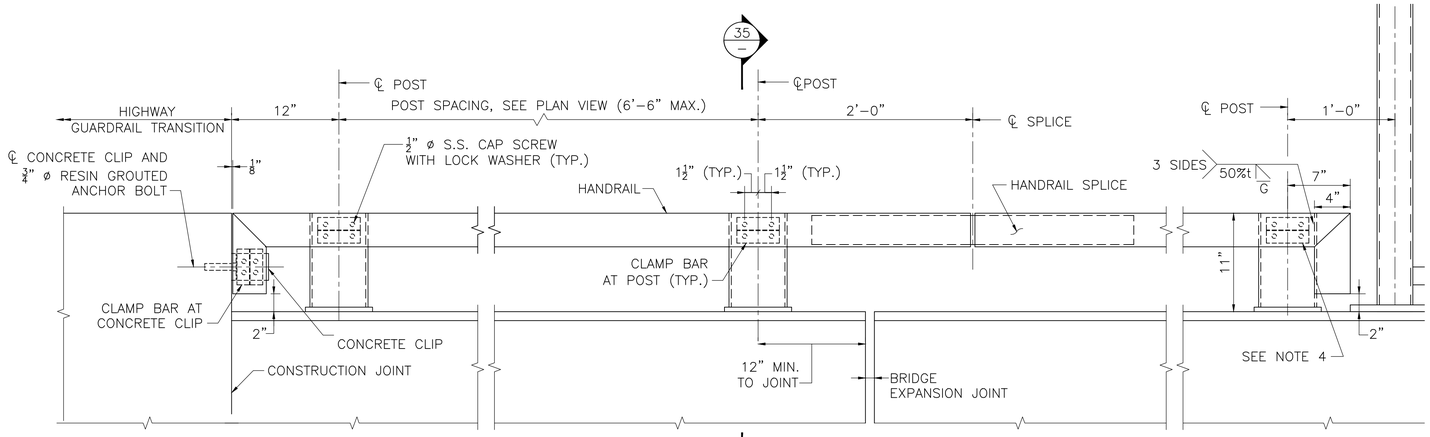

HANDRAIL ELEVATION
SCALE: 1 1/2" = 1'–0"

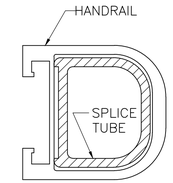

SECTION 37
SCALE: 6" = 1'–0"

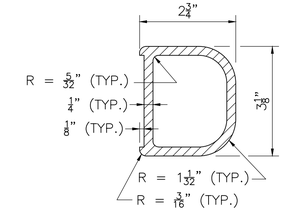

SPLICE TUBE
SCALE: 6" = 1'–0"

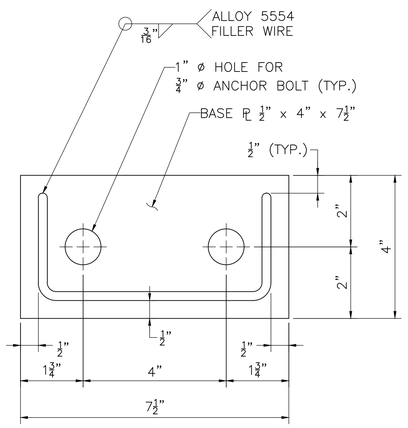

BASE PLATE DETAIL
SCALE: 6" = 1'–0"

GENERAL NOTES:

1. RAILS SHALL BE CONTINUOUS OVER A MINIMUM OF FOUR POSTS, IF POSSIBLE.
2. RAILS SHALL HAVE A HANDRAIL SPLICE IN THE PANEL OVER A BRIDGE EXPANSION JOINT. 1/2" GAP SHALL BE INCREASED AS REQUIRED.
3. OTHER CONFIGURATIONS OF THE INTERNAL WALLS OF THE RAIL EXTRUSION MAY BE SUBMITTED FOR APPROVAL.
4. AT 45° MITRES, TRIM OFF 1/16" NUB ON VERTICAL RAIL SECTION AS NEEDED TO ALLOW BOTTOM HORIZONTAL CLAMP BAR TO PROPERLY ENGAGE THE HORIZONTAL RAIL.

FINISH:

POSTS, RAILS BASE PLATES, CONCRETE CLIP AND SPLICE TUBE SHALL RECEIVE A DARK BRONZE ANODIZED FINISH

MATERIALS:

RAIL, POST AND BASE PLATE.....ASTM B 221, ALLOY 6061–T6
CLAMP BAR, RAIL SPLICE AND CONC. CLIP.....ASTM B 221, ALLOY 6061–T6
S.S. FASTENERS.....ASTM A 193 GRADE B8 (TYPE 403)
ANCHOR BOLTS.....AASHTO M 164 GALVANIZED (ROTATION CAPACITY TEST NOT REQUIRED)
ALUMINUM WASHERS.....ASTM B 209 ALLOW ALCLAD 2024–T4

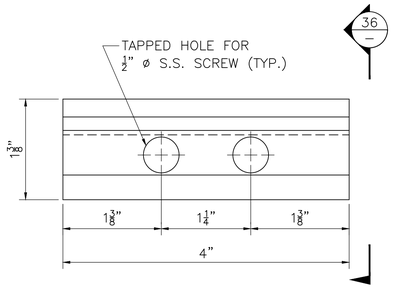

CLAMP BAR AT CONCRETE CLIP
FULL SIZE

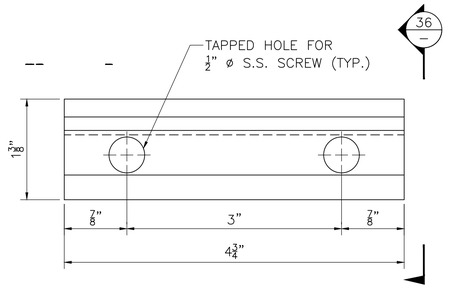

CLAMP BAR AT POST
FULL SIZE

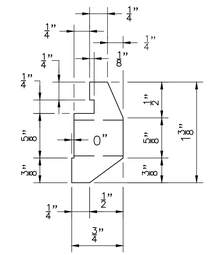

SECTION 36
FULL SIZE

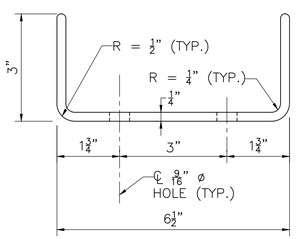

POST DETAIL
SCALE: 6" = 1'–0"

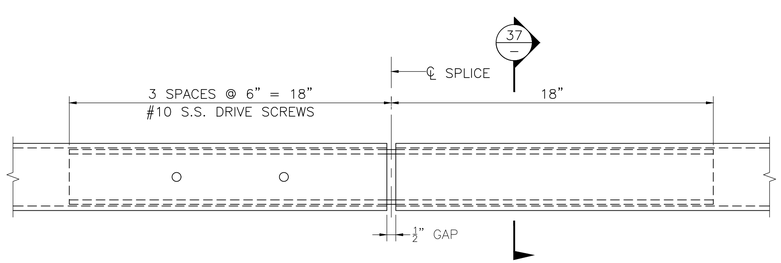

HANDRAIL SPLICE
SCALE: 3" = 1'–0"

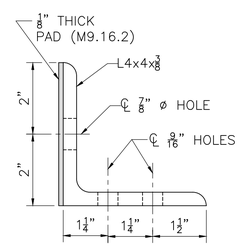

TOP VIEW

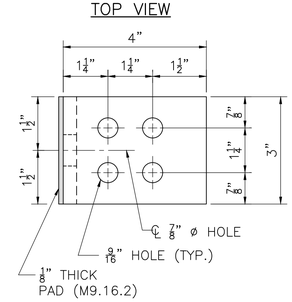

ELEVATION

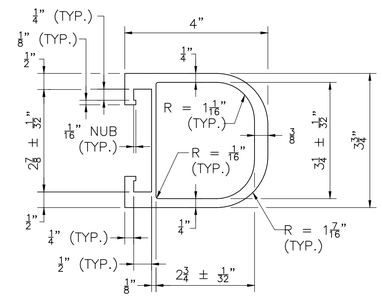

RAIL DETAIL
SCALE: 6" = 1'–0"

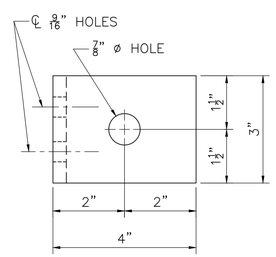

SIDE VIEW

CONCRETE CLIP
SCALE: 6" = 1'–0"

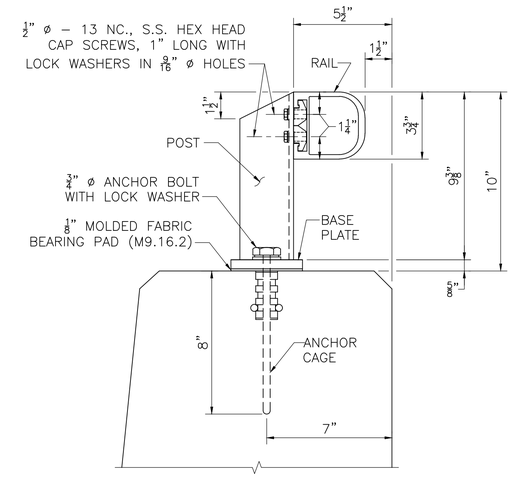

SECTION 35
SCALE: 3" = 1'–0"

xxx xx xxxx	ISSUED FOR CONSTRUCTION
DATE	
USE ONLY PRINTS OF LATEST DATE	

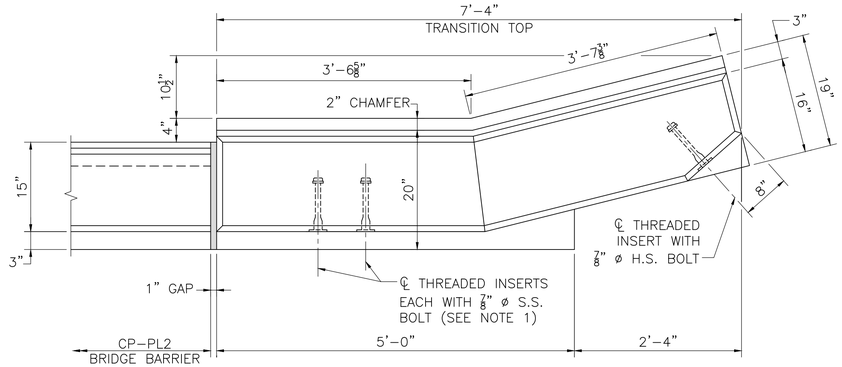

PLAN AT SAFETY CURB

SCALE: 1" = 1'-0"

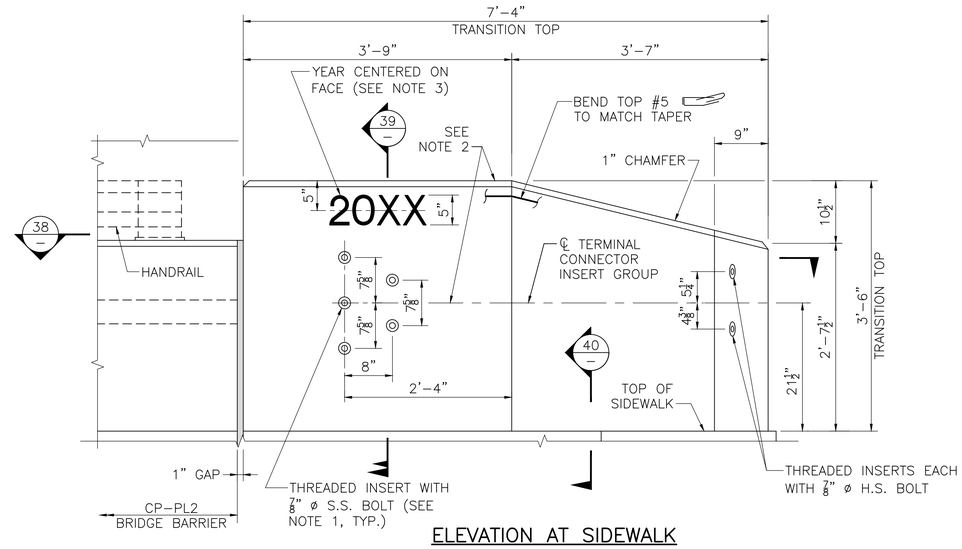

ELEVATION AT SIDEWALK

SCALE: 1" = 1'-0"

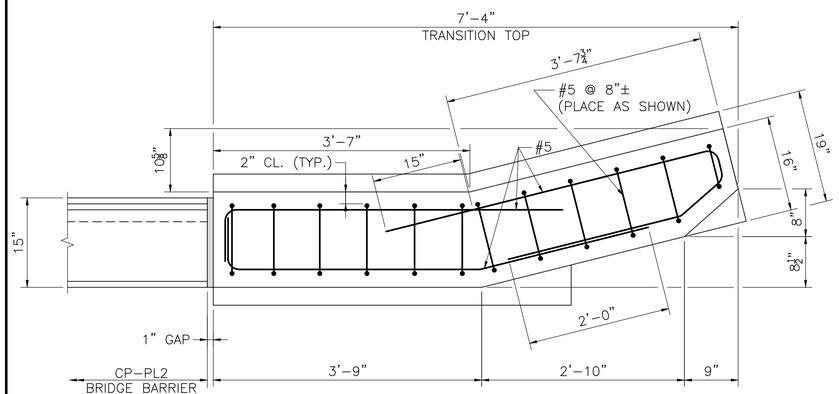

SECTION 38

SCALE: 1" = 1'-0"

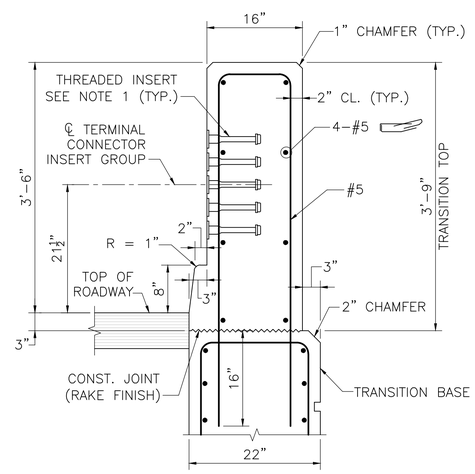

SECTION 39 AT SAFETY CURB

SCALE: 1" = 1'-0"

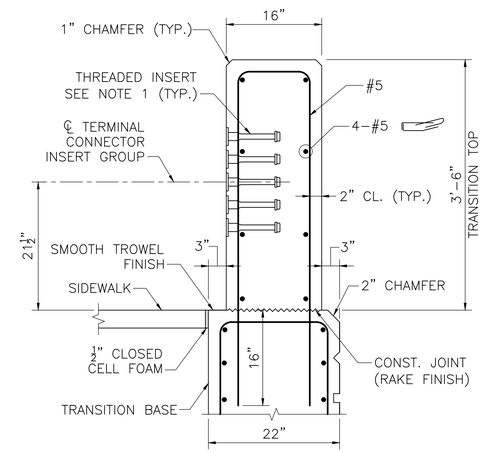

SECTION 39 AT SIDEWALK

SCALE: 1" = 1'-0"

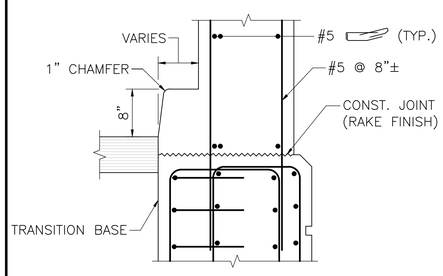

SECTION 40 AT SAFETY CURB

SCALE: 1" = 1'-0"

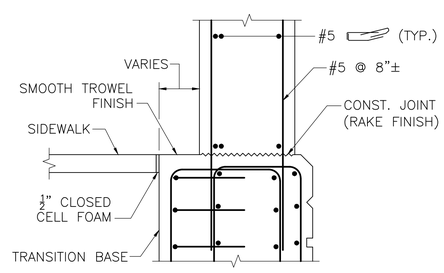

SECTION 40 AT SIDEWALK

SCALE: 1" = 1'-0"

NOTES:

1. THREADED INSERTS SHALL BE PREQUALIFIED BY THE MANUFACTURER AS BEING CAPABLE OF DEVELOPING A NOMINAL SHEAR RESISTANCE OF 20 KIPS PER 7/8" ø S.S. BOLT. S.S. BOLTS SHALL BE 7/8" ø x 1 1/2" LONG FULLY THREADED AISI TYPE 304N STAINLESS STEEL. INSERTS FOR 7/8" S.S. BOLTS SHALL BE GALVANIZED AND CAST INTO THE TRANSITION.
2. FOR AN APPROACH GRADE UP TO 3%, THE TRANSITION MAY BE CAST SQUARE AND SET PLUMB WITH THE MINIMUM EMBEDMENT DEPTH SHOWN. THE TERMINAL CONNECTOR INSERT GROUP SHALL BE SQUARE TO THE POST.

   FOR AN APPROACH GRADE IN EXCESS OF 3%, THE TRANSITION TOP AND THE TOP OF THE BRIDGE BARRIERS SHALL FOLLOW THE APPROACH GRADE. THE HEIGHT OF THE TRANSITION TOP SHALL VARY PROVIDED THAT THE MINIMUM DIMENSIONS SHOWN ON THE CONSTRUCTION DRAWINGS ARE MET. THE BOTTOM OF THE TRANSITION BASE SHALL BE SET LEVEL WITH THE MINIMUM EMBEDMENT DEPTH SHOWN. THE TERMINAL CONNECTOR INSERT GROUP SHALL BE SLOPED TO FOLLOW THE APPROACH GRADE.
3. USE LATEST CONTRACT COMPLETION YEAR IN EFFECT WHEN THE FIRST GUARDRAIL TRANSITION IS CAST. USE THIS YEAR FOR ALL GUARDRAIL TRANSITIONS.
4. ALL CONCRETE FOR THE PRECAST HIGHWAY GUARDRAIL TRANSITION SHALL BE 5000 PSI, 3/4", 685 HP CEMENT CONCRETE.
5. LIFTING DEVICES (NOT SHOWN), INCLUDING THEIR NUMBER AND LOCATION, SHALL BE DESIGNED AND DETAILED BY THE PRECASTER. THEY SHALL BE GALVANIZED AND SHALL BE PLACED AND RECESSED IN POCKETS TO PROVIDE 1 1/2" CLEAR COVER TO THE FACE OF THE TRANSITION CONCRETE. THESE DEVICES SHALL BE CLEARLY SHOWN ON THE SHOP DRAWINGS ALONG WITH ALL SUPPORTING CALCULATIONS AND/OR CATALOG CUTS. ONCE THE PRECAST TRANSITION IS SET IN PLACE, THE LIFTING DEVICE POCKETS SHALL BE FILLED WITH A NON-SHRINK GROUT THAT MATCHES THE COLOR OF THE TRANSITION CONCRETE WHEN CURED AND THE FILLED POCKETS SHALL BE RUBBED WITH A CORUNDUM STONE TO BLEND OUT THE JOINTS.

SHARON
MASKWONICUT STREET

STATE	FED. AID PROJ. NO.	SHEET NO.	TOTAL SHEETS
MA	–	46	86
PROJECT FILE NO.	608079		

TOP OF PRECAST HIGHWAY GUARDRAIL TRANSITION

xxx xx xxxx	ISSUED FOR CONSTRUCTION
DATE	
USE ONLY PRINTS OF LATEST DATE	

SHARON
MASKWONICUT STREET

STATE	FED. AID PROJ. NO.	SHEET NO.	TOTAL SHEETS
MA	–	46	86
PROJECT FILE NO.	608079		

TEMPORARY SUPPORT OF EXCAVATION DETAILS

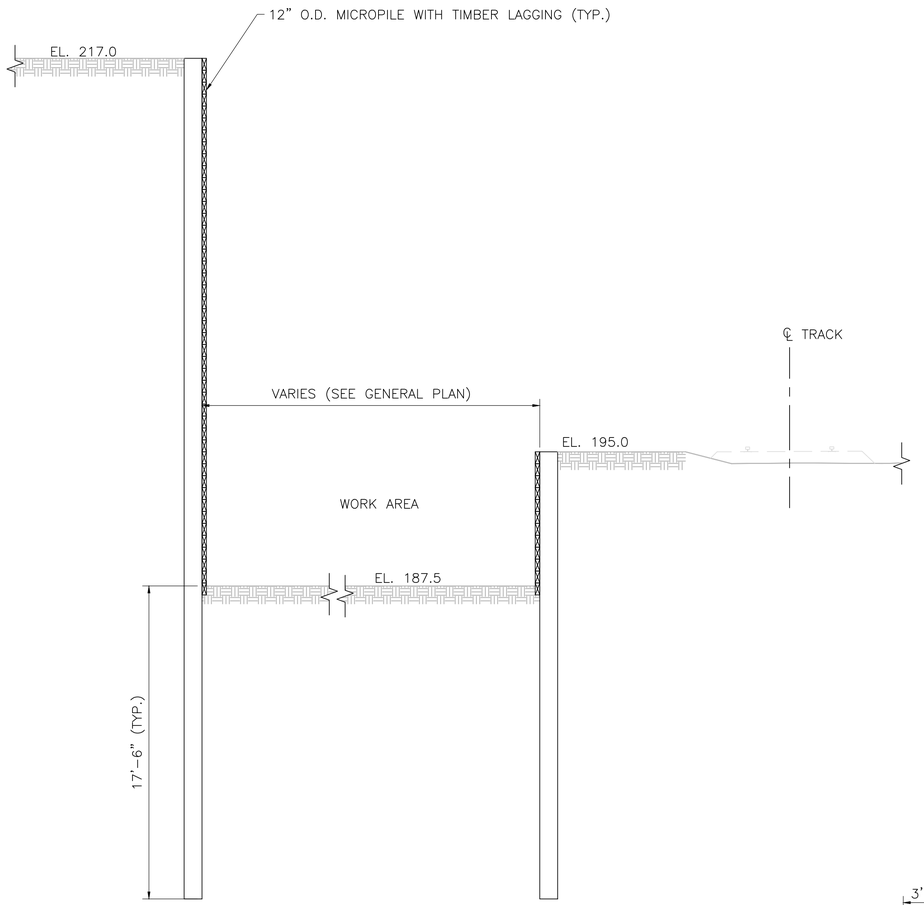

EARTH SUPPORT SYSTEM
SECTION @ EAST ABUTMENT
SCALE: 1/4" = 1'-0"

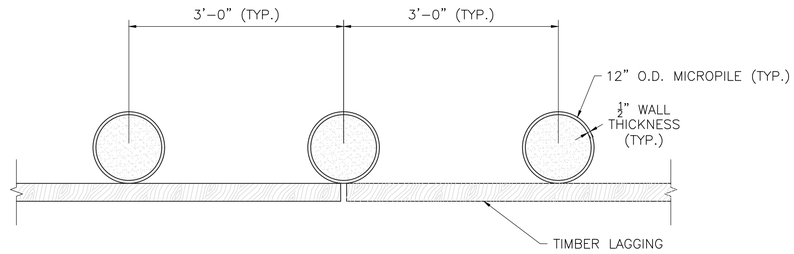

EARTH SUPPORT SYSTEM DETAIL
SCALE: 1" = 1'-0"

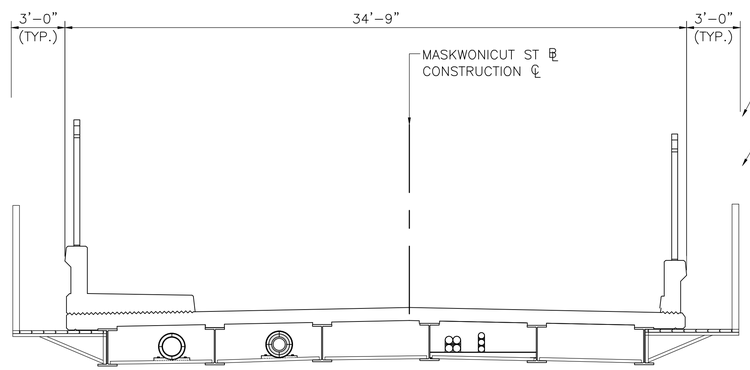

SHIELDING SHALL EXTEND BEYOND HEIGHT OF ELECTRIFICATION BARRIER

SHIELDING (BY CONTRACTOR)

SHIELDING NOTES:

1. SHIELDING SHALL BE DESIGNED TO SUPPORT MAXIMUM LIVE LOAD OF 100 PSF. CONTRACTOR TO REMOVE ANY LIVE LOAD ON SHIELDING AT END OF DAY.

2. CONTRACTOR SHALL INSPECT SHIELDING PRIOR TO ANY WORK AND AT THE END OF THE WORK DAY EACH DAY

3. CONTRACTOR TO PROVIDE DESIGN COMPUTATION AND SHOP DRAWINGS OF SHIELDING TO SUPPORT REQUIRED TEMPORARY LOAD A MINIMUM OF 2 WEEKS PRIOR TO ANY CONSTRUCTION.

TEMPORARY SHIELDING
SCALE: 1/4" = 1'-0"

xxx xx xxxx	ISSUED FOR CONSTRUCTION
DATE	
USE ONLY PRINTS OF LATEST DATE	

OCS GENERAL NOTES:

GENERAL NOTES

1. ALL OCS MODIFICATIONS, HARDWARE AND MATERIALS ARE TO BE IN ACCORDANCE WITH AMTRAK NORTHEND ELECTRIFICATION STANDARDS, UNLESS MODIFIED HEREIN.
2. ALL MESSENGER AND CONTACT WIRE HEIGHTS ARE RELATIVE TO INDIVIDUAL TRACK AND ARE MEASURED PERPENDICULAR TO TRACK SUPERELEVATION ALONG THE TRACK CENTERLINE.
3. SYSTEM HEIGHT REPRESENTS MESSENGER WIRE TO IN–RUNNING CONTACT WIRE.
4. ALL STRUCTURE ERECTION DIAGRAMS ARE FACING IN THE DIRECTION OF BOSTON.
5. STATIC AND FEEDER WIRE HEIGHTS ARE MEASURED FROM THE HIGHEST RAIL OF THE CONCERNED TRACK. GENERALLY CLEARANCE OF THE STATIC AND FEEDER WIRES FROM GRADE IS GREATER DUE TO DRILLED SHAFT PROJECTION FROM GRADE TO TOP OF RAIL.
6. ALL ITEMS ARE EXISTING UNLESS MARKED NEW. NEW INFORMATION IS SHOWN IN BOLD WHILE CLOUDS DESIGNATE MODIFICATIONS TO THE EXISTING CONFIGURATION.
7. WHEREVER A SPECIFIC MANUFACTURED ITEM IS LISTED ON THE DRAWINGS, AN APPROVED EQUAL IS ACCEPTABLE. DEVIATIONS MUST BE SUBMITTED FOR AMTRAK APPROVAL.
8. THE CONTRACTOR (IF APPLICABLE) IS TO PROVIDE A SCHEDULE AND SITE SPECIFIC WORK PLAN OF EACH OPERATION AND OBTAIN APPROVAL FROM AMTRAK SO THAT ANY INSTALLATION MAY BE PROPERLY SUPERVISED BY AMTRAK PERSONNEL.
9. THE CONTRACTOR SHALL BE RESPONSIBLE FOR VERIFYING ALL QUANTITIES PRIOR TO PURCHASING AND FABRICATION OF MATERIAL.
10. WHEN SUPPORT OF TRACK OR TRACKS IS NECESSARY DURING CONSTRUCTION, INTERLOCKING STEEL SHEETING ADEQUATELY BRACED AND DESIGNED TO CARRY E–80 LIVE LOAD PLUS 50% IMPACT IS REQUIRED. SOLDIER PILES AND LAGGING WILL BE PERMITTED FOR SUPPORTING ADJACENT TRACK OR TRACKS ONLY WHEN REQUIRED PENETRATION OF STEEL SHEET PILING CAN NOT BE OBTAINED OR WHEN IN THE OPINION OF THE ENGINEER, STEEL SHEET PILING WOULD BE IMPRACTICAL TO PLACE.

STRUCTURAL NOTES

1. ALL STRUCTURAL STEEL WORK SHALL CONFORM TO THE AISC "SPECIFICATION FOR STRUCTURAL STEEL BUILDINGS" AND THE AISC "CODE OF STANDARD PRACTICE FOR STEEL BUILDINGS AND BRIDGES".
2. ALL STRUCTURAL STEEL PLATES AND BARS SHALL CONFORM TO ASTM A36.
3. ALL PIPE AND SQUARE TUBE SHALL BE ASTM A500 GRADE B.
4. STRUCTURAL STEEL WIDE FLANGE SECTIONS AND ROLLED SECTIONS SHALL CONFORM TO ASTM A992.
5. COLD FORMED STEEL TUBING SHALL CONFORM TO ASTM A847.
6. ALL STRUCTURAL STEEL AND FABRICATED STEEL ASSEMBLIES SHALL BE HOT DIPPED GALVANIZED, MAXIMUM COAT, IN ACCORDANCE WITH ASTM A123 UNLESS OTHERWISE NOTED. STEEL HARDWARE AND FASTENERS SHALL BE GALVANIZED PER ASTM A153.
7. ALL STRUCTURAL FIELD CONNECTIONS SHALL BE BOLTED UNLESS OTHERWISE NOTED. FIELD WELDS ARE NOT PERMITTED UNLESS AUTHORIZED BY THE ENGINEER.
8. ALL BOLTING SHALL CONFORM TO THE "STANDARD SPECIFICATION FOR HIGH STRENGTH STRUCTURAL BOLTS AND ASSEMBLIES USING ASTM F3125," LATEST REVISION.
9. ALL STRUCTURAL CONNECTIONS SHALL CONSIST OF 7/8" DIAMETER ASTM F3125, GRADE A325, TYPE 2, HEAVY HEX BOLT WITH ASTM A563 GRADE DH HEAVY HEX NUT AND ASTM F436 WASHER UNLESS NOTED OTHERWISE.
10. MINIMUM BOLT SIZE SHALL BE 7/8 INCH DIAMETER UNLESS OTHERWISE NOTED, FOR TYPE "N" CONNECTIONS (THREADS INCLUDED IN SHEAR PLANE). PROVIDE A MINIMUM OF TWO (2) 7/8" DIAMETER ASTM F3125, GRADE A325 BOLTS OR EQUIVALENT AT EACH CONNECTION.
11. BOLT HOLE SIZES SHALL BE 1/8" INCH LARGER THAN THE BOLT DIAMETER UNLESS OTHERWISE NOTED.
12. ALL EDGES OF OVERLAPPING OR CONTACTING SURFACES SHALL BE SEAL WELDED.
13. WITHOUT EXCEPTION, CONTRACTOR SHALL VERIFY ALL DIMENSIONS AND CONDITIONS IN THE FIELD BEFORE COMMENCING FABRICATION OF ANY STRUCTURAL STEEL OR ASSEMBLIES. IF FIELD CONDITIONS PROHIBIT THE USE OF DETAILS CONTAINED IN THE CONTRACT DRAWINGS, SUBMIT ALTERNATE DESIGN DETAILS FOR APPROVAL BY THE ENGINEER.
14. ALL FABRICATED ASSEMBLIES SHALL BE DETAILED WITH VENT AND DRAIN HOLES CONFORMING TO THE REQUIREMENTS OF ASTM A385.

CONSTRUCTION NOTES

1. ELECTRICAL OUTAGES DURING CONSTRUCTION, OUTSIDE OF PREDETERMINED INTERVALS, WILL NOT BE PERMITTED. THE CONTRACTOR SHALL SCHEDULE AND PERFORM ALL WORK IN A MANNER THAT DOES NOT INTERFERE WITH AMTRAK OR MBTA OPERATIONS.
2. THE CONSTRUCTION CONTRACTOR SHALL ACCOMPLISH ALL NECESSARY COORDINATION WITH OTHER RELATED CONSTRUCTION PHASES AND CONTRACTORS FOR THIS PROJECT INCLUDING AMTRAK OR MBTA FORCE ACCOUNT PERSONNEL.
3. BEFORE ANY WORK IS COMMENCED, COORDINATE WITH AMTRAK AND THE MBTA REGARDING REQUIREMENTS OF TRACK AND/OR POWER OUTAGES FOLLOWING ALL STANDARD PROCEDURES AND SAFETY RULES.
4. THE EXISTING AERIAL CONDUCTORS, INCLUDING BUT NOT LIMITED TO FEEDER LINES, CATENARY WIRING, AND ASSOCIATED SUPPORTS SHALL BE TREATED AS LIVE. NO WORK SHALL BE PERFORMED UNTIL A SITE SPECIFIC WORK PLAN (SSWP) IS APPROVED BY AMTRAK.
5. DURING THE CONSTRUCTION STAGING PROVIDE REQUISITE WARNING SIGNS INDICATING UNWIRED OR DEAD SECTIONS.
6. BEFORE ANY ELECTRICAL SECTION IS ENERGIZED, ENSURE THAT ALL GROUNDED CONNECTIONS TO THE POWER SYSTEM ARE REMOVED AND ALL AMTRAK SAFETY AND ENERGIZATION PROCEDURES ARE FOLLOWED.
7. THE CONTRACTOR SHALL COORDINATE WITH AMTRAK FOR SPECIFIC PROCEDURES REGARDING TEMPORARY INSULATION, SUPPORT, DEAD–ENDING, ETC. AS MAY BE NECESSARY TO MAINTAIN ELECTRICAL SERVICE.
8. CONTRACTOR TO PROVIDE DESIGN AS NEEDED FOR ALL TEMPORARY CONDITIONS TO FACILITATE CONSTRUCTION.
9. THE PROPOSED DESIGN INCLUDES TEMPORARY RELOCATION OF THE ANCILLARY WIRES FROM THE EXISTING BRIDGE ABUTMENTS. IF AMTRAK PERMITS AND IT IS DEEMED FEASIBLE, IT MAY BE POSSIBLE TO LEAVE THE INSULATED FEEDER SPANS IN PLACE AND INSTEAD INSTALL PULLOFFS BETWEEN THE TWO FEEDER WIRES TO FREE UP THE EXISTING ABUTMENTS FOR DEMOLITION.

DIVISION OF WORK AND MATERIAL SUPPLY

ITEM	DESCRIPTION	MATERIAL	FABRICATION	ERECTION	LABOR
1	CATENARY SYSTEM MODIFICATIONS	C	C	R	R
2	REMOVAL OF EXISTING CATENARY SUPPORTS	N/A	N/A	N/A	R
3	MODIFICATIONS TO EXISTING DOWN GUY ASSEMBLIES	C	C*	R	R
4	DEMOLITION OF EXISTING BRIDGE ABUTMENTS	N/A	N/A	N/A	C
5	CONSTRUCTION OF THE NEW MASKWONICUT BRIDGE	C	C*	C	C
6	BRIDGE BONDING AND GROUNDING INSTALLATION	C	N/A	C	C
7	FINAL BONDING AND GROUNDING TIE–IN TO STATIC WIRE	C	N/A	R	R

R = FORCE ACCOUNT C = CONTRACTOR * = SHOP FABRICATION

LIST OF DRAWINGS:

100% SUBMISSION

SHARON
MASKWONICUT STREET BRIDGE
OVER MBTA/AMTRAK RAILROAD

STATE	FED. AID PROJ. NO.	SHEET NO.	TOTAL SHEETS
MASS.	-	49	86
PROJECT FILE NO.		-	

OCS ABBREVIATIONS

ABBREVIATIONS

A/B	AS BUILT
AC	ALTERNATING CURRENT
ACI	AMERICAN CONCRETE INSTITUTE
ACSR	ALUMINUM CONDUCTOR STEEL REINFORCED
ACT	ACTUAL
ADJ.	ADJACENT
AISC	AMERICAN INSTITUTE OF STEEL CONSTRUCTION
AL	ALUMINUM
ALT	ALTERNATE
AMMS	AMTRAK MASTER MATERIAL SPECIFICATION
ANSI	AMERICAN NATIONAL STANDARDS INSTITUTE
APPROX	APPROXIMATELY
A/R	AS REQUIRED
ASTM	AMERICAN SOCIETY FOR TESTING AND MATERIALS
ASS'Y	ASSEMBLY
AT	FIXED TERMINATION ANCHOR
AWG	AMERICAN WIRE GAUGE
AWS	AMERICAN WELDING SOCIETY
B.C.	BOLT CIRCLE
BOS	BOTTOM OF STEEL
BRKT	BRACKET
BRZ	BRONZE
BWA	BALANCE WEIGHT ANCHOR
C	CONTRACTOR
°C	DEGREES CELSIUS
CAT	CATENARY
CFT	CUBIC FEET
CIP	CAST IN PLACE
CKT	CIRCUIT
℄	CENTERLINE
CLR.	CLEAR, CLEARANCE
COL	COLUMN
CONC	CONCRETE
COND.	CONDUCTOR
CONT.	CONTINUED
CS	CURVE TO SPIRAL
CU	COPPER
CW	CONTACT WIRE
C.W.G.	CONTACT WIRE GRADIENT
CY.	CUBIC YARD
DE	DEAD END
DET.	DETAIL
DGA	DOWN GUY ANCHOR

ABBREVIATIONS

DIA.	DIAMETER
DIM.	DIMENSION
DISC	DISCONNECT
DWG.	DRAWING
EA.	EACH
EL.	ELEVATION
ELEC	ELECTRIC, ELECTRICAL
EQUIP	EQUIPMENT
EXIST.	EXISTING
°F	DEGREES FAHRENHEIT
FAB.	FABRICATE
FDR	FEEDER WIRE
FLEX.	FLEXIBLE
FND	FOUNDATION
FOS	FACTOR OF SAFETY
F/S	FACE OF STEEL
FT	FOOT, FEET
FTG	FOOTING
FWA	FEEDER WIRE TERMINATION ANCHOR
GALV.	GALVANIZED
GND	GROUND
GRS	GALVANIZED RIGID STEEL
GW	GROUND WIRE
HEX.	HEXAGONAL
H.D.	HARD DRAWN
HH	HEAVY HEX
HHN&W	HEAVY HEX NUT AND WASHER
HORIZ.	HORIZONTAL
HR	HANGER
HRL	HIGH RAIL LEVEL
H.S.	HIGH STRENGTH
HT	HEIGHT
HVY	HEAVY
HZ	HERTZ
ID	INSIDE DIAMETER, IDENTIFICATION
IHRL	INDIVIDUAL HIGH RAIL LEVEL
IN	INCHES
INCL	INCLUDING, INCLUSIVE
INS.	INSULATED
IR	IN–RUNNING
KCMIL	THOUSAND CIRCULAR MILS
K–FT	KIP–FEET
KV	KILOVOLT
∠	ANGLE
L	LENGTH

ABBREVIATIONS

LB	POUND
LG	LONG
LOCN	LOCATION
MAX.	MAXIMUM
MESS.	MESSENGER
MI	MALLEABLE IRON
MIN.	MINIMUM
MISC	MISCELLANEOUS
MOD.	MODIFIED
M.O.D.	MOTOR–OPERATED DISCONNECT
MP	MILEPOST
MPA	MIDPOINT ANCHOR
MPH	MILES PER HOUR
MPW	MIDPOINT WIRE
MTG	MOUNTING
MW	MESSENGER WIRE
N/A	NOT APPLICABLE
N.C.	NORMALLY CLOSED
NEMA	NATIONAL ELECTRICAL MANUFACTURER'S ASSOCIATION
NEP	NORTHEND ELECTRIFICATION PROJECT
NESC	NATIONAL ELECTRIC SAFETY CODE
N.I.C.	NOT IN CONTRACT
NO.	NUMBER
N.O.	NORMALLY OPEN
NOM.	NOMINAL
N.S.R.	NON–SUPPORTED OR REGISTERED
N.T.S.	NOT TO SCALE
OPP.	OPPOSITE
OC	ON CENTER
OCS	OVERHEAD CONTACT SYSTEM
O.D.	OUTSIDE DIAMETER
OHB	OVERHEAD BRIDGE
OOR	OUT–OF–RUNNING
ℙ	PLATE
PLCS	PLACES
P.O.	PULL OFF
PROP.	PROPOSED
PS	POINT OF SWITCH
PSI	POUNDS PER SQUARE INCH
QTY.	QUANTITY
R	RADIUS, FORCE ACCOUNT
RE–CL	RUNNING EDGE OF TRK TO CENTERLINE OF FND
RECMND	RECOMMENDED
REF	REFERENCE

ABBREVIATIONS

REINF.	REINFORCED
REQ'D	REQUIRED
R.H.	RIGHT HAND
ROW	RIGHT–OF–WAY
RR	RAILROAD
SC	SPIRAL TO CURVE
SHT.	SHEET
SIG	SIGNAL
SP.	SPACES
SPEC.	SPECIFICATION
SQ	SQUARE
SQ IN	SQUARE INCHES
S/S	STAINLESS STEEL
ST	SPIRAL TO TANGENT, STREET
STA	STATIONING
STD.	STANDARD
STR.	STRUCTURE
SW	STATIC WIRE
SWA	STATIC WIRE ANCHOR
SWDE	STATIC WIRE DEAD END
Ⓣ	TRACK SIDE
TB	TURNBUCKLE
TBR	TO BE REMOVED
TEMP.	TEMPORARY, TEMPERATURE
TERM	TERMINATION
T/F	TOP OF FOOTING
THD	THREAD
THK	THICK
THRU	THROUGH
TMA	TRACK MAINTENANCE ALLOWANCE
T.O.C.	TOP OF CONCRETE
TOS	TOP OF STEEL
T/R	TOP OF RAIL
TRK	TRACK
TS	TANGENT TO SPIRAL
TYP.	TYPICAL
TX	TRANSMISSION
UNC	UNIFIED COARSE THREAD SERIES
VERT.	VERTICAL
W/	WITH
WF, W	WIDE FLANGE
W.R.	WIRE RUN
WT	WEIGHT, STRUCTURAL TEE SECTION
XS	EXTRA STRONG

ABBREVIATIONS

@	AT
&	AND
ø	DIAMETER
'	FOOT, FEET
"	INCHES
±	PLUS OR MINUS

100% SUBMISSION

OCS LEGEND

FEEDER WIRE

STATIC WIRE

IN–RUNNING WIRE

OUT–OF–RUNNING WIRE

MIDPOINT WIRE

STAGGER (FEET) – SEE NOTE 1 — +0.67

SPAN LENGTH (FEET) — 125

VERSINE — 36

BLOCK NUMBER AND WIRE RUN NUMBER — X/X

IN–SPAN INSULATOR

SECTION INSULATOR

SIGNAL MAST

DOWN GUY AND ANCHOR FND

POLE FND

TAIL JUMPER

FULL FEEDING JUMPER

CONTINUITY JUMPER

EXISTING SINGLE POLE STRUCTURE

ITEM CALL OUT — 1

SECTION CALL OUT — SEC. / SHEET

NORTH DIRECTION

NEW WORK ON EXISTING STRUCTURE

STRUCTURE TEXT BOX

211–35		STRUCTURE NUMBER
211+2096		TRACK STATIONING
SW	23.65	STATIC WIRE HEIGHT
FDR	26.96	FEEDER WIRE HEIGHT
22.26	18.24	MESSENGER/CONTACT WIRE HEIGHTS

NOTES:

1. ARROW DIRECTION INDICATES EITHER PUSH–OFF OR PULL–OFF DEPENDING ON DIRECTION RESPECTIVE TO THE STRUCTURE. POSITIVE STAGGER INDICATES STAGGER ON OPPOSITE SIDE OF CENTERLINE OF TRACK RESPECTIVE TO THE STRUCTURE, WHILE NEGATIVE STAGGER INDICATES STAGGER ON THE NEAR SIDE OF THE CENTERLINE.

100% SUBMISSION

SHARON
MASKWONICUT STREET BRIDGE
OVER MBTA/AMTRAK RAILROAD

STATE	FED. AID PROJ. NO.	SHEET NO.	TOTAL SHEETS
MASS.	-	51	86
PROJECT FILE NO.		-	

SUGGESTED STAGING PLAN (1 OF 4)

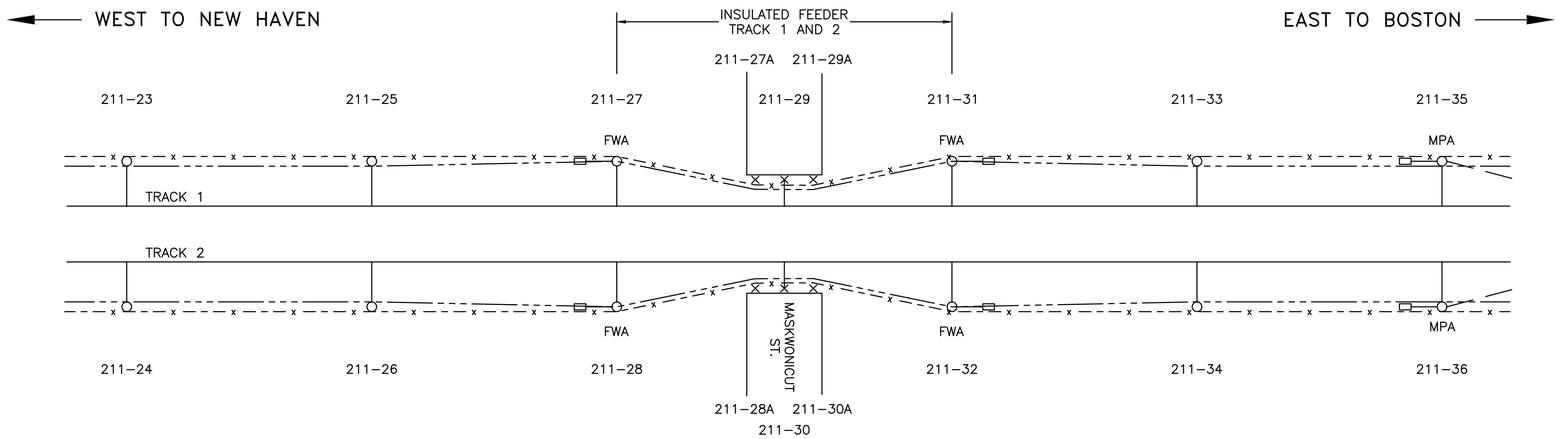

EXISTING
SCALE: N.T.S.

STAGING APPROACH:

1. THE OCS AND ANCILLARY WIRES ARE SUPPORTED FROM THE EXISTING BRIDGE ABUTMENTS WITH RESILIENT ARMS. OCS WIRES TO BE RE–PROFILED TO FREE RUN UNDERNEATH THE MASKWONICUT ST OHB IN THE FINAL CONDITION.
2. FEEDER AND STATIC WIRES TO BE TEMPORARILY RELOCATED TO ALLOW FOR ABUTMENT DEMOLITION. ONCE EXISTING ABUTMENTS HAVE BEEN REMOVED, ANCILLARY WIRES ARE RETURNED TO THEIR ORIGINAL INSTALLATION AT ADJACENT STRUCTURES, AND THEY WILL FREE RUN UNDERNEATH THE PROPOSED BRIDGE IN THE FINAL CONDITION.

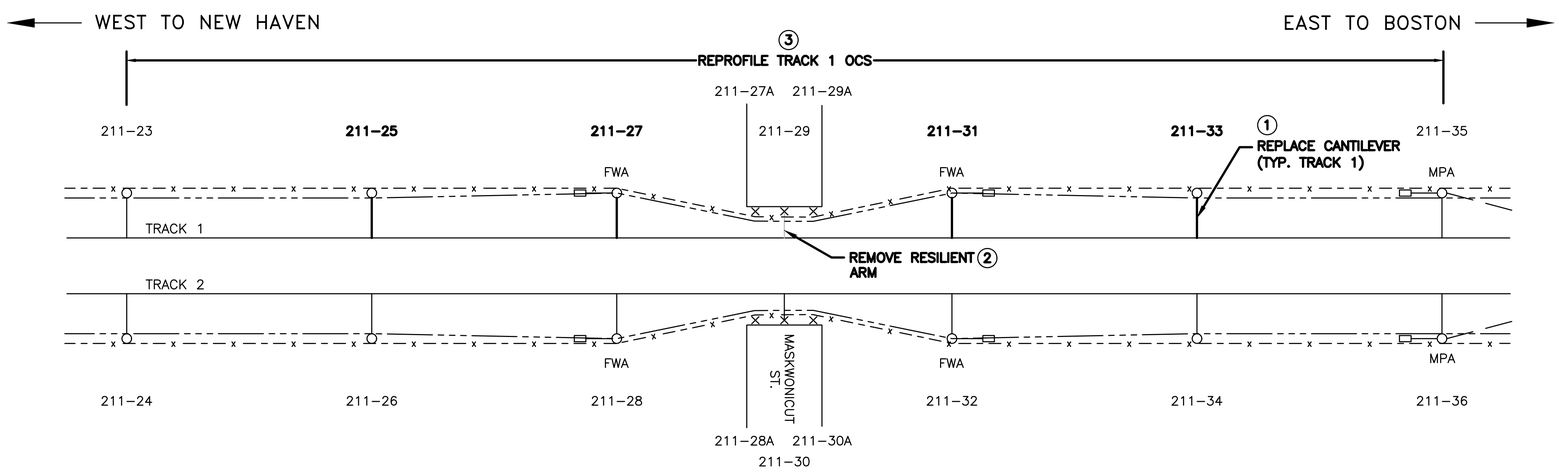

STAGE 1
SCALE: N.T.S.

SUGGESTED SEQUENCE OF CONSTRUCTION – STAGE 1:

*ALL WORK TO BE COMPLETED DURING NIGHT OUTAGES UNLESS AN EXTENDED OUTAGE IS NOTED.

1. REPLACE TRACK 1 CANTILEVERS AT STRUCTURES 211–25, 211–27, 211–31 AND 211–33.
2. REMOVE TRACK 1 RESILIENT ARM AT STRUCTURE 211–29.
3. RE–PROFILE TRACK 1 OCS FROM STRUCTURE 211–23 TO STRUCTURE 211–35 TO ACHIEVE THE FINAL WIRE PROFILES.

100% SUBMISSION

SHARON
MASKWONICUT STREET BRIDGE
OVER MBTA/AMTRAK RAILROAD

STATE	FED. AID PROJ. NO.	SHEET NO.	TOTAL SHEETS
MASS.	-	52	86
PROJECT FILE NO.		-	

SUGGESTED STAGING PLAN (2 OF 4)

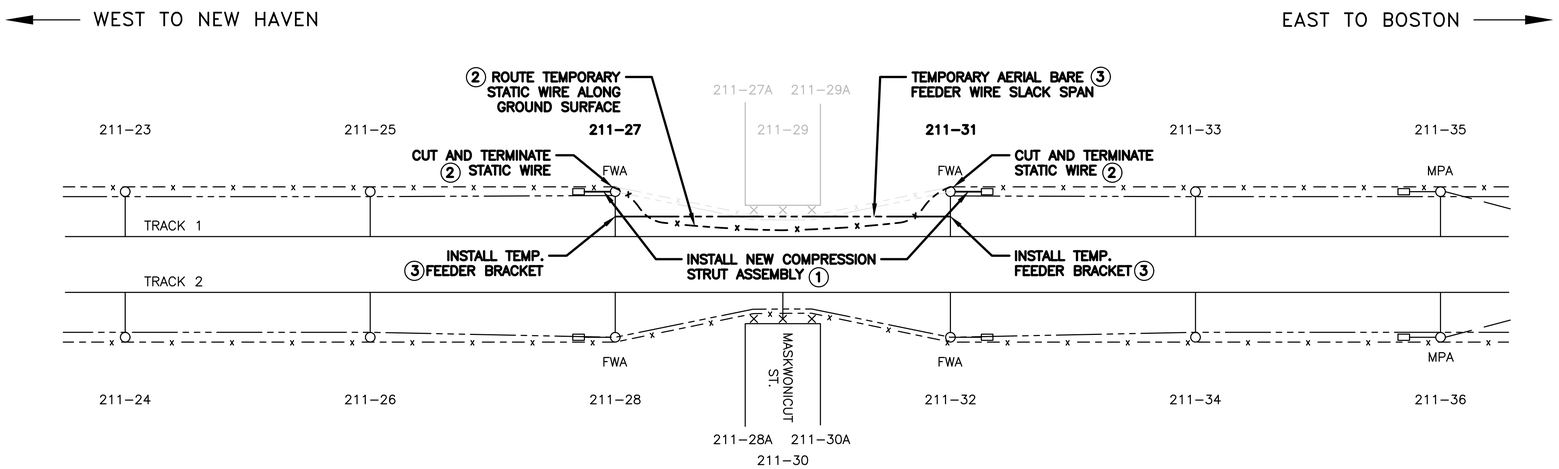

STAGE 2A
SCALE: N.T.S.

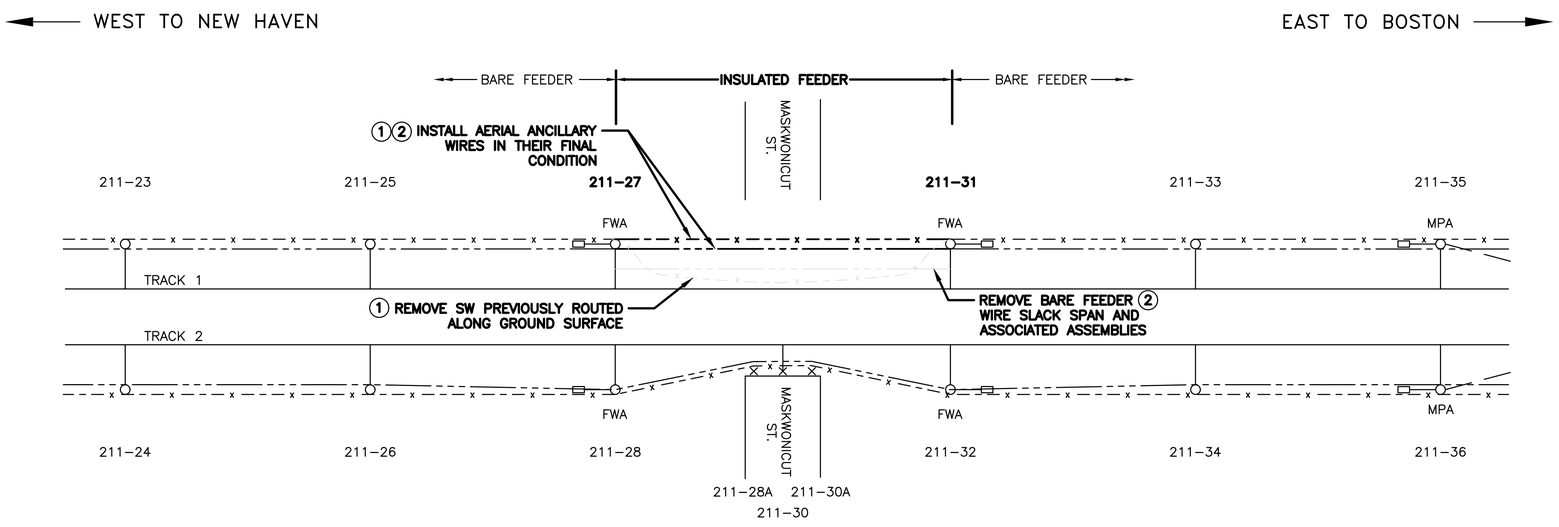

STAGE 2B
SCALE: N.T.S.

NOTES:

1. THE PROPOSED DESIGN INCLUDES TEMPORARY RELOCATION OF THE ANCILLARY WIRES FROM THE EXISTING BRIDGE ABUTMENTS. IF AMTRAK PERMITS AND IT IS DEEMED FEASIBLE, IT MAY BE POSSIBLE TO LEAVE THE INSULATED FEEDER SPANS IN PLACE AND INSTEAD INSTALL PULLOFFS BETWEEN THE TWO FEEDER WIRES TO FREE UP THE EXISTING ABUTMENTS FOR DEMOLITION.

SUGGESTED SEQUENCE OF CONSTRUCTION – STAGE 2A:

*ALL WORK TO BE COMPLETED DURING NIGHT OUTAGES UNLESS AN EXTENDED OUTAGE IS NOTED.

1. REMOVE EXISTING TRACK 1 DOWN GUY ASSEMBLIES AT STRUCTURES 211–27 AND 211–31 AND INSTALL NEW COMPRESSION STRUTS.
2. INSTALL NEW STATIC WIRE TERMINATION ASSEMBLIES AT STRUCTURES 211–27 AND 211–31. CUT AND TERMINATE THE EXISTING TRACK 1 STATIC WIRE AT STRUCTURES 211–27 AND 211–31. REMOVE THE EXISTING STATIC WIRE BETWEEN THESE STRUCTURES AND STORE EXISTING STATIC WIRE SUPPORT ASSEMBLIES FOR FUTURE RE–INSTALLATION IN THE FINAL CONDITION. RUN A NEW TEMPORARY STATIC WIRE ALONG THE GROUND SURFACE AND CONNECT TO SW TERMINATIONS AT STRUCTURES 211–27 AND 211–31 TO MAINTAIN GROUNDING SYSTEM CONTINUITY.
3. INSTALL TEMPORARY TRACK 1 LONG FEEDER WIRE BRACKETS AND POST INSULATORS FOR CABLE ROUTING AT STRUCTURES 211–27 AND 211–31. UNBOLT 4 HOLE LUG OF EXISTING INSULATED NEGATIVE FEEDER TERMINATION (LOCATED AFTER BARE FEEDER STRAIN CLAMP) AT STRUCTURES 211–27 AND 211–31. INSTALL A SLACK BARE FEEDER SPAN USING THE LONG FEEDER BRACKET SUPPORTS. AT BOTH STRUCTURES, THE BARE FEEDER WILL ROUTE DOWN THE COLUMNS AND SHALL BE CONNECTED TO THE TERMINATED BARE FEEDER TO ENSURE SUPPLY CONTINUITY. REMOVE INSULATED FEEDER BETWEEN STRUCTURES 211–27 AND 211–31. CONTRACTOR TO PROTECT ALL ELEMENTS OF THE INSULATED NEGATIVE FEEDER TERMINATION ASSEMBLY FOR RE–INSTALLATION IN THE FINAL CONDITION. (SEE NOTE 1)
4. TAKE TRACK 1 OUT OF SERVICE AND TRACK 2 OUT OF SERVICE AS NECESSARY FOR A WEEKEND OUTAGE FOR ABUTMENT DEMOLITION.
5. DEMOLISH EXISTING BRIDGE ABUTMENT – NORTH SIDE.
6. RETURN BOTH TRACKS TO REVENUE SERVICE.

SUGGESTED SEQUENCE OF CONSTRUCTION – STAGE 2B:

*ALL WORK TO BE COMPLETED DURING NIGHT OUTAGES UNLESS AN EXTENDED OUTAGE IS NOTED.

1. RE–INSTALL PREVIOUSLY STORED STATIC WIRE SUPPORT ASSEMBLIES AT STRUCTURES 211–27 AND 211–31. SPLICE–IN NEW STATIC WIRE AND SUPPORT USING RE–INSTALLED ASSEMBLIES. REMOVE TEMPORARY STATIC WIRE PREVIOUSLY ROUTED ALONG THE GROUND SURFACE.
2. REMOVE TEMPORARY AERIAL BARE FEEDER WIRE SLACK SPAN AND SUPPORTING ASSEMBLIES BETWEEN STRUCTURES 211–27 AND 211–31. RE–ASSEMBLE INSULATED NEGATIVE FEEDER TERMINATION ASSEMBLIES AND RE–INSTALL INSULATED FEEDER CABLE BETWEEN STRUCTURES 211–27 AND 211–31.

100% SUBMISSION

SHARON
MASKWONICUT STREET BRIDGE
OVER MBTA/AMTRAK RAILROAD

STATE	FED. AID PROJ. NO.	SHEET NO.	TOTAL SHEETS
MASS.	-	53	86
PROJECT FILE NO.		-	

SUGGESTED STAGING PLAN (3 OF 4)

NOTES:

1. THE PROPOSED DESIGN INCLUDES TEMPORARY RELOCATION OF THE ANCILLARY WIRES FROM THE EXISTING BRIDGE ABUTMENTS. IF AMTRAK PERMITS AND IT IS DEEMED FEASIBLE, IT MAY BE POSSIBLE TO LEAVE THE INSULATED FEEDER SPANS IN PLACE AND INSTEAD INSTALL PULLOFFS BETWEEN THE TWO FEEDER WIRES TO FREE UP THE EXISTING ABUTMENTS FOR DEMOLITION.

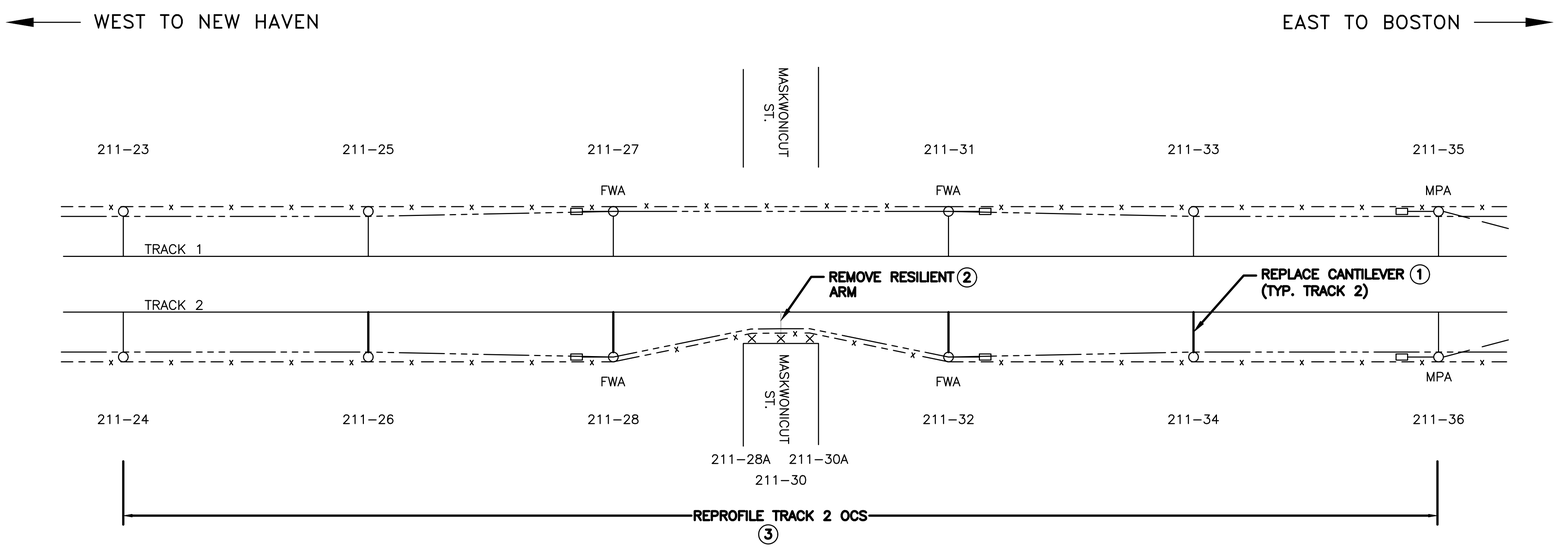

STAGE 3
SCALE: N.T.S.

SUGGESTED SEQUENCE OF CONSTRUCTION – STAGE 3:

*ALL WORK TO BE COMPLETED DURING NIGHT OUTAGES UNLESS AN EXTENDED OUTAGE IS NOTED.

1. REPLACE TRACK 2 CANTILEVERS AT STRUCTURES 211–26, 211–28, 211–32, AND 211–34.
2. REMOVE TRACK 2 RESILIENT ARM AT STRUCTURE 211–30.
3. RE–PROFILE TRACK 2 OCS FROM STRUCTURE 211–24 TO STRUCTURE 211–36 TO ACHIEVE THE FINAL WIRE PROFILES.

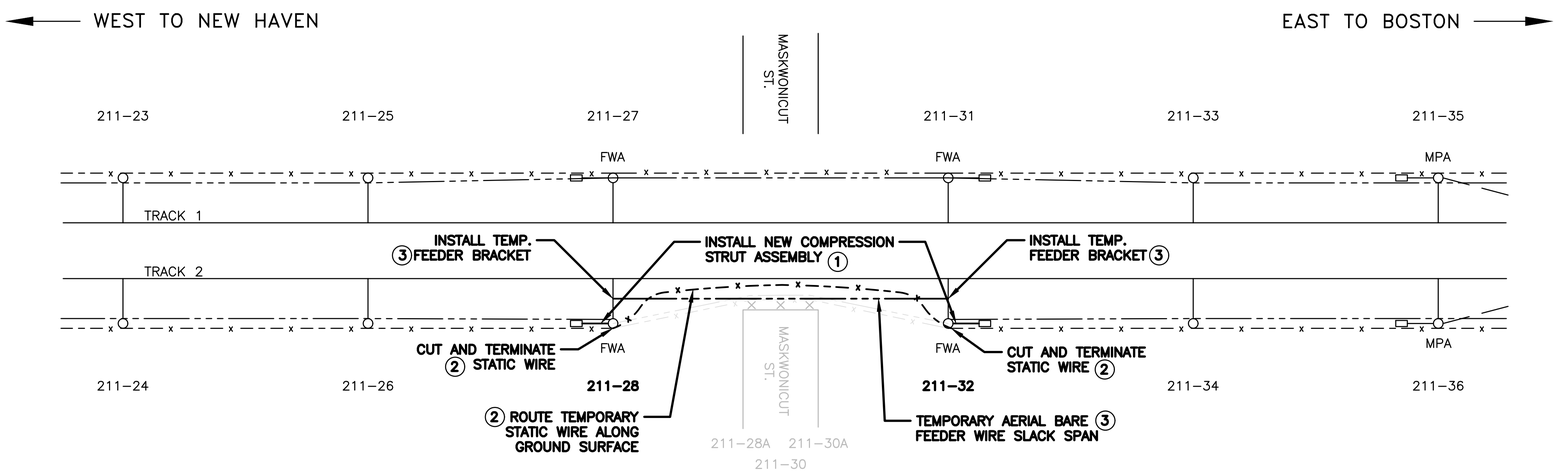

STAGE 4A
SCALE: N.T.S.

SUGGESTED SEQUENCE OF CONSTRUCTION – STAGE 4A:

*ALL WORK TO BE COMPLETED DURING NIGHT OUTAGES UNLESS AN EXTENDED OUTAGE IS NOTED.

1. REMOVE EXISTING TRACK 2 DOWN GUY ASSEMBLIES AT STRUCTURES 211–28 AND 211–32 AND INSTALL NEW COMPRESSION STRUTS.
2. INSTALL NEW STATIC WIRE TERMINATION ASSEMBLIES AT STRUCTURES 211–28 AND 211–32. CUT AND TERMINATE THE EXISTING TRACK 2 STATIC WIRE AT STRUCTURES 211–28 AND 211–32. REMOVE THE EXISTING STATIC WIRE BETWEEN THESE STRUCTURES AND STORE EXISTING STATIC WIRE SUPPORT ASSEMBLIES FOR FUTURE RE–INSTALLATION IN THE FINAL CONDITION. RUN A NEW TEMPORARY STATIC WIRE ALONG THE GROUND SURFACE AND CONNECT TO SW TERMINATIONS AT STRUCTURES 211–28 AND 211–32 TO MAINTAIN GROUNDING SYSTEM CONTINUITY.
3. INSTALL TEMPORARY TRACK 2 LONG FEEDER WIRE BRACKETS AND POST INSULATORS FOR CABLE ROUTING AT STRUCTURES 211–28 AND 211–32. UNBOLT 4 HOLE LUG OF EXISTING INSULATED NEGATIVE FEEDER TERMINATION (LOCATED AFTER BARE FEEDER STRAIN CLAMP) AT STRUCTURES 211–28 AND 211–32. INSTALL A SLACK BARE FEEDER SPAN USING THE LONG FEEDER BRACKET SUPPORTS. AT BOTH STRUCTURES, THE BARE FEEDER WILL ROUTE DOWN THE COLUMNS AND SHALL BE CONNECTED TO THE TERMINATED BARE FEEDER TO ENSURE SUPPLY CONTINUITY. REMOVE INSULATED FEEDER BETWEEN STRUCTURES 211–28 AND 211–32. CONTRACTOR TO PROTECT ALL ELEMENTS OF THE INSULATED NEGATIVE FEEDER TERMINATION ASSEMBLY FOR RE–INSTALLATION IN THE FINAL CONDITION. (SEE NOTE 1)
4. TAKE TRACK 2 OUT OF SERVICE AND TRACK 1 OUT OF SERVICE AS NECESSARY FOR A WEEKEND OUTAGE FOR ABUTMENT DEMOLITION.
5. DEMOLISH EXISTING BRIDGE ABUTMENT – SOUTH SIDE.
6. RETURN BOTH TRACKS TO REVENUE SERVICE.

100% SUBMISSION

SHARON
MASKWONICUT STREET BRIDGE
OVER MBTA/AMTRAK RAILROAD

STATE	FED. AID PROJ. NO.	SHEET NO.	TOTAL SHEETS
MASS.	-	54	86
PROJECT FILE NO.		-	

SUGGESTED STAGING PLAN (4 OF 4)

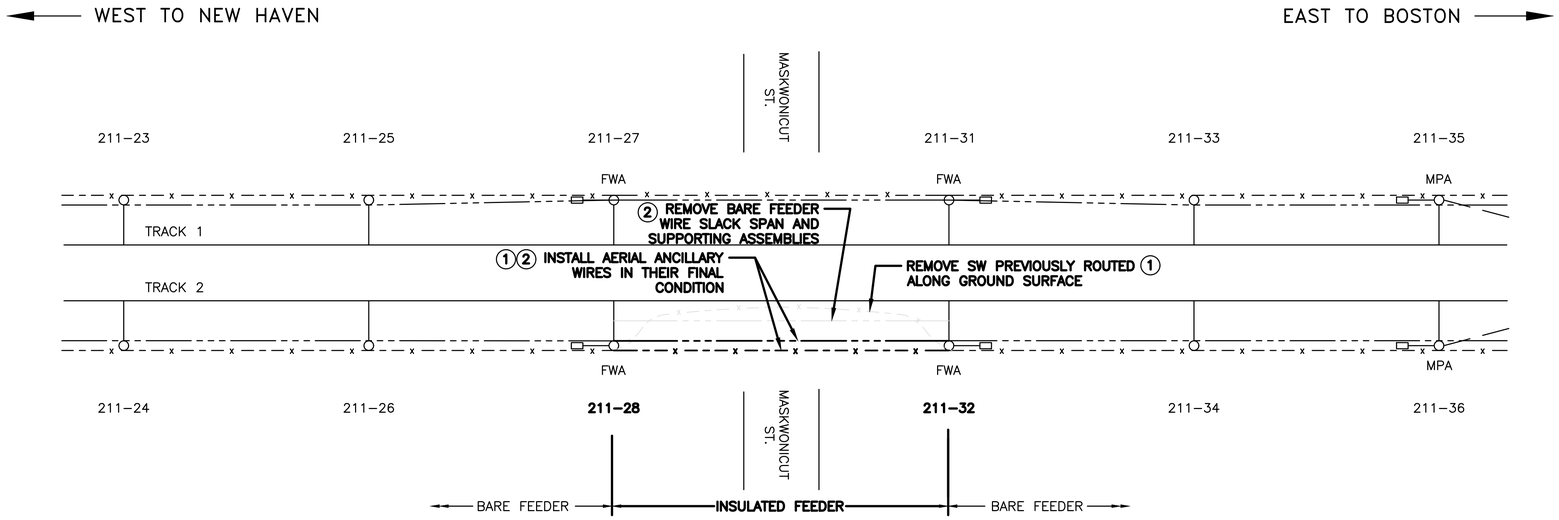

STAGE 4B
SCALE: N.T.S.

SUGGESTED SEQUENCE OF CONSTRUCTION – STAGE 4B:

*ALL WORK TO BE COMPLETED DURING NIGHT OUTAGES UNLESS AN EXTENDED OUTAGE IS NOTED.

1. RE–INSTALL PREVIOUSLY STORED STATIC WIRE SUPPORT ASSEMBLIES AT STRUCTURES 211–28 AND 211–32. SPLICE–IN NEW STATIC WIRE AND SUPPORT USING RE–INSTALLED ASSEMBLIES. REMOVE TEMPORARY STATIC WIRE PREVIOUSLY ROUTED ALONG THE GROUND SURFACE.
2. REMOVE TEMPORARY AERIAL BARE FEEDER WIRE SLACK SPAN AND SUPPORTING ASSEMBLIES BETWEEN STRUCTURES 211–28 AND 211–32. RE–ASSEMBLE INSULATED NEGATIVE FEEDER TERMINATION ASSEMBLIES AND RE–INSTALL INSULATED FEEDER CABLE BETWEEN STRUCTURES 211–28 AND 211–32.

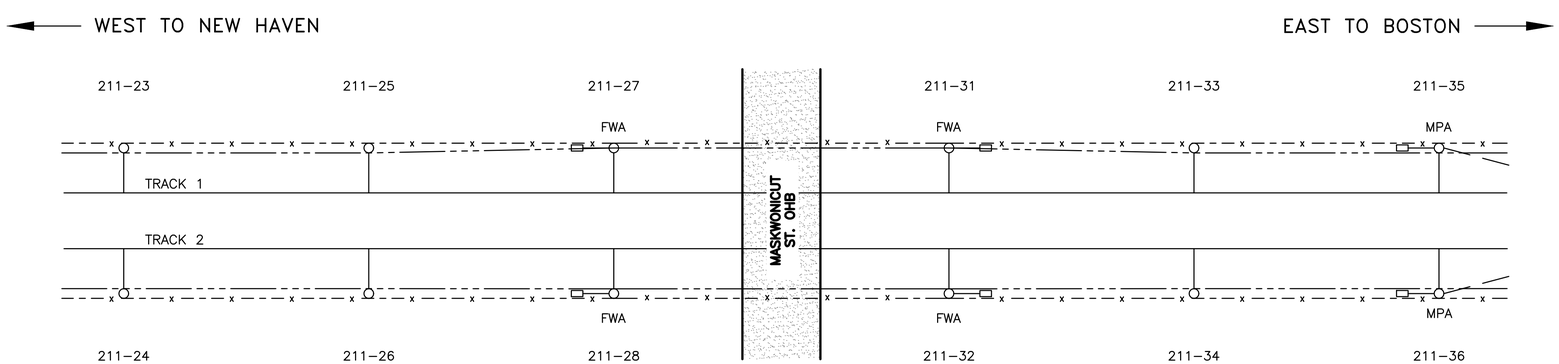

STAGE 5
SCALE: N.T.S.

SUGGESTED SEQUENCE OF CONSTRUCTION – STAGE 5:

*ALL WORK TO BE COMPLETED DURING NIGHT OUTAGES UNLESS AN EXTENDED OUTAGE IS NOTED.

1. CONSTRUCT THE NEW MASKWONICUT STREET OVERHEAD BRIDGE (BY OTHERS).
2. INSTALL NEW BRIDGE BONDING AND GROUNDING (BY OTHERS).
3. AMTRAK FORCE ACCOUNT TO COMPLETE FINAL TIE–IN OF BRIDGE GROUNDING TO TRACK 1 AND TRACK 2 STATIC WIRES.

100% SUBMISSION

145 MPH TRACK SPEED	140 MPH TRACK SPEED
NON–POLLUTED	
NON–EXPOSED	

SHARON
MASKWONICUT STREET BRIDGE
OVER MBTA/AMTRAK RAILROAD

STATE	FED. AID PROJ. NO.	SHEET NO.	TOTAL SHEETS
MASS.	-	55	86
PROJECT FILE NO.		-	

WIRING LAYOUT - EXISTING

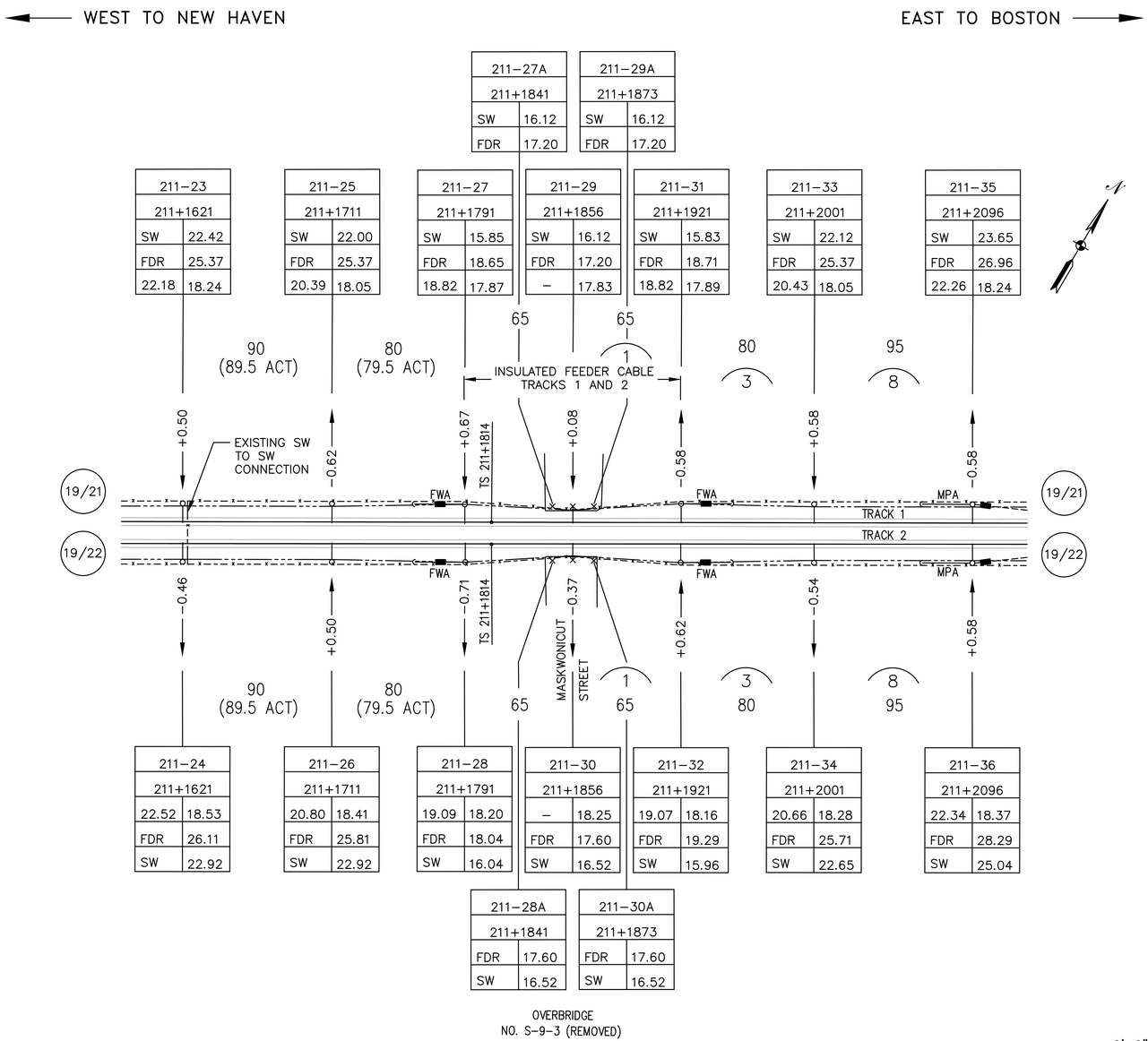

NOTES:

1. SEE SHEETS 48 THROUGH 50 FOR OCS GENERAL NOTES, ABBREVIATIONS, AND LEGEND, RESPECTIVELY.
2. SPAN LENGTHS SHOWN ARE ACTUAL BASED ON SURVEY, WHILE STATIONING OF THE STRUCTURES COMES FROM AMTRAK'S AS–BUILT DRAWINGS. IN SOME CASES THE STATIONING MAY NOT REPRESENT THE PHYSICAL DIFFERENCE BETWEEN THE STRUCTURES.
3. ALL SPANS, STAGGERS, AND WIRE HEIGHTS ARE IN FEET. STRINGLINES ARE IN HUNDRETHS OF FEET.
4. MESSENGER AND CONTACT WIRE HEIGHTS ARE MEASURED PERPENDICULAR TO INDIVIDUAL HIGH RAIL LEVEL.
5. ALL ANCILLARY WIRES ARE MEASURED VERTICALLY RELATIVE TO INDIVIDUAL HIGH RAIL LEVEL.
6. ALL POLLUTED AND EXPOSED AREAS ARE INDICATED ON THE LAYOUTS.
7. EXISTING OCS AND ANCILLARY WIRE HEIGHTS DEPICTED ON THE LAYOUT PLANS WERE MEASURED DURING A FIELD SURVEY PERFORMED ON 7/10/19 AND REFLECT CHANGES TO EXISTING CONDITIONS SHOWN ON AMTRAK AS–BUILT DRAWINGS.

0'–0" 40'–0" 80'–0" 120'–0"
SCALE: 1" = 40'–0"

100% SUBMISSION

EXISTING WIRING LAYOUT.DWG Plotted on Nov-20 3:27 PM

145 MPH TRACK SPEED	140 MPH TRACK SPEED
NON–POLLUTED	
NON–EXPOSED	

SHARON
MASKWONICUT STREET BRIDGE
OVER MBTA/AMTRAK RAILROAD

STATE	FED. AID PROJ. NO.	SHEET NO.	TOTAL SHEETS
MASS.	-	56	86
PROJECT FILE NO.		-	

WIRING LAYOUT - TEMPORARY

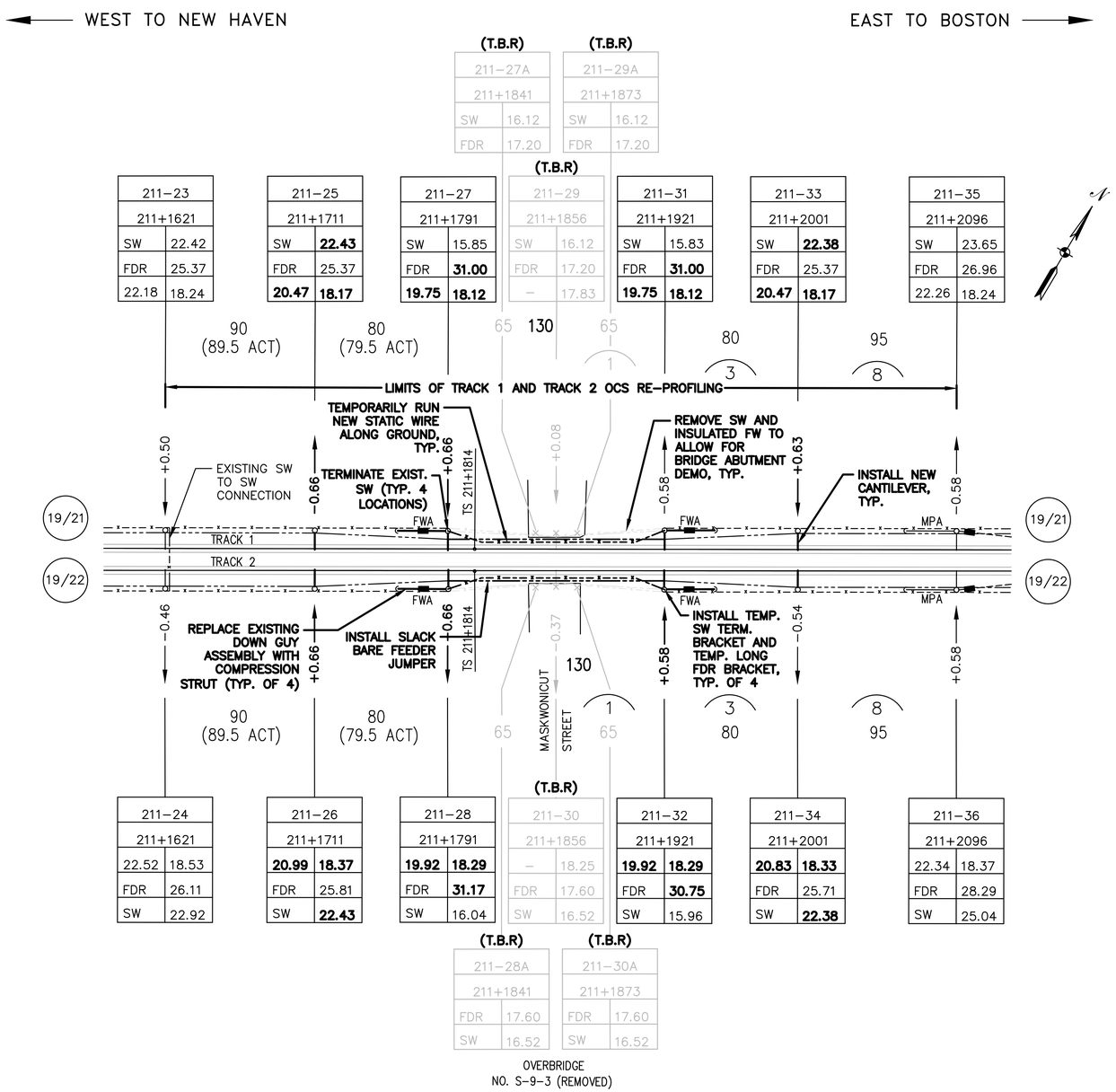

TEMP. SW TERM. ASSEMBLY INSTALL LOCATIONS (DEA–1 AND DEA–2)
211–27
211–28
211–31
211–32

TEMP. LONG FDR BRACKET INSTALL LOCATIONS
211–27
211–28
211–31
211–32

NOTES:

1. SEE SHEETS 48 THROUGH 50 FOR OCS GENERAL NOTES, ABBREVIATIONS, AND LEGEND, RESPECTIVELY.
2. SPAN LENGTHS SHOWN ARE ACTUAL BASED ON SURVEY, WHILE STATIONING OF THE STRUCTURES COMES FROM AMTRAK'S AS–BUILT DRAWINGS. IN SOME CASES THE STATIONING MAY NOT REPRESENT THE PHYSICAL DIFFERENCE BETWEEN THE STRUCTURES.
3. ALL SPANS, STAGGERS, AND HEIGHTS ARE IN FEET. STRINGLINES ARE IN HUNDRETHS OF FEET.
4. MESSENGER AND CONTACT WIRE HEIGHTS ARE MEASURED PERPENDICULAR TO INDIVIDUAL HIGH RAIL LEVEL.
5. ALL ANCILLARY WIRES ARE MEASURED VERTICALLY RELATIVE TO INDIVIDUAL HIGH RAIL LEVEL.
6. ALL POLLUTED AND EXPOSED AREAS ARE INDICATED ON THE LAYOUTS.

0'–0" 40'–0" 80'–0" 120'–0"
SCALE: 1" = 40'–0"

100% SUBMISSION

TEMPORARY WIRING LAYOUT.DWG Plotted on Nov-20 3:28 PM

145 MPH TRACK SPEED	140 MPH TRACK SPEED
NON–POLLUTED	
NON–EXPOSED	

SHARON
MASKWONICUT STREET BRIDGE
OVER MBTA/AMTRAK RAILROAD

STATE	FED. AID PROJ. NO.	SHEET NO.	TOTAL SHEETS
MASS.	-	57	86
PROJECT FILE NO.		-	

WIRING LAYOUT - FINAL

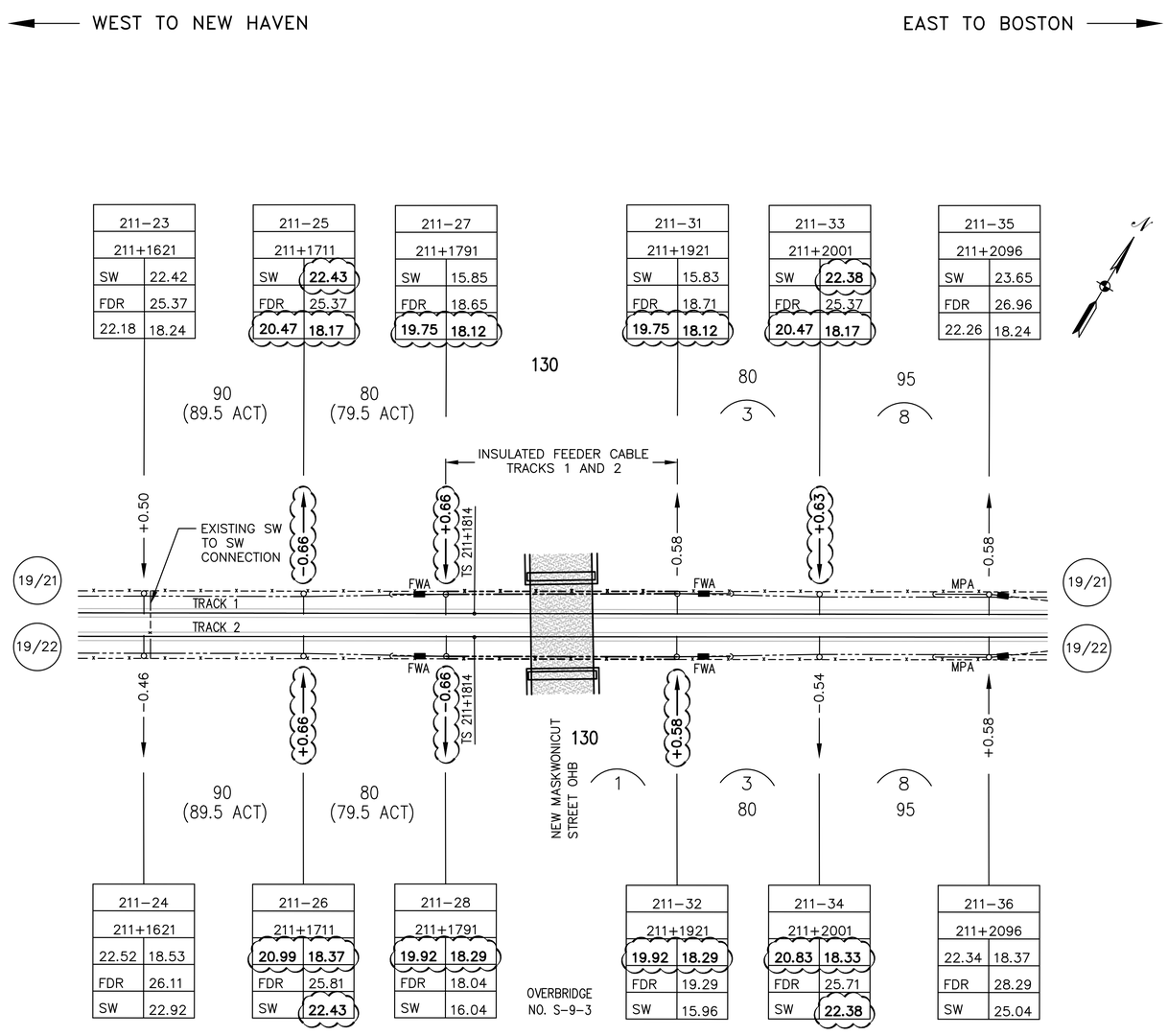

NOTES:

1. SEE SHEETS 48 THROUGH 50 FOR OCS GENERAL NOTES, ABBREVIATIONS, AND LEGEND, RESPECTIVELY.
2. SPAN LENGTHS SHOWN ARE ACTUAL BASED ON SURVEY, WHILE STATIONING OF THE STRUCTURES COMES FROM AMTRAK'S AS–BUILT DRAWINGS. IN SOME CASES THE STATIONING MAY NOT REPRESENT THE PHYSICAL DIFFERENCE BETWEEN THE STRUCTURES.
3. ALL SPANS, STAGGERS, AND HEIGHTS ARE IN FEET. STRINGLINES ARE IN HUNDRETHS OF FEET.
4. MESSENGER AND CONTACT WIRE HEIGHTS ARE MEASURED PERPENDICULAR TO INDIVIDUAL HIGH RAIL LEVEL.
5. ALL ANCILLARY WIRES ARE MEASURED VERTICALLY RELATIVE TO INDIVIDUAL HIGH RAIL LEVEL.
6. ALL POLLUTED AND EXPOSED AREAS ARE INDICATED ON THE LAYOUTS.

0'–0" 40'–0" 80'–0" 120'–0"
SCALE: 1" = 40'–0"

100% SUBMISSION

FINAL WIRING LAYOUT.DWG Plotted on Nov-20 3:28 PM

SHARON
MASKWONICUT STREET BRIDGE
OVER MBTA/AMTRAK RAILROAD

STATE	FED. AID PROJ. NO.	SHEET NO.	TOTAL SHEETS
MASS.	-	58	86
PROJECT FILE NO.		-	

ANCILLARY WIRE PROFILES - TEMP

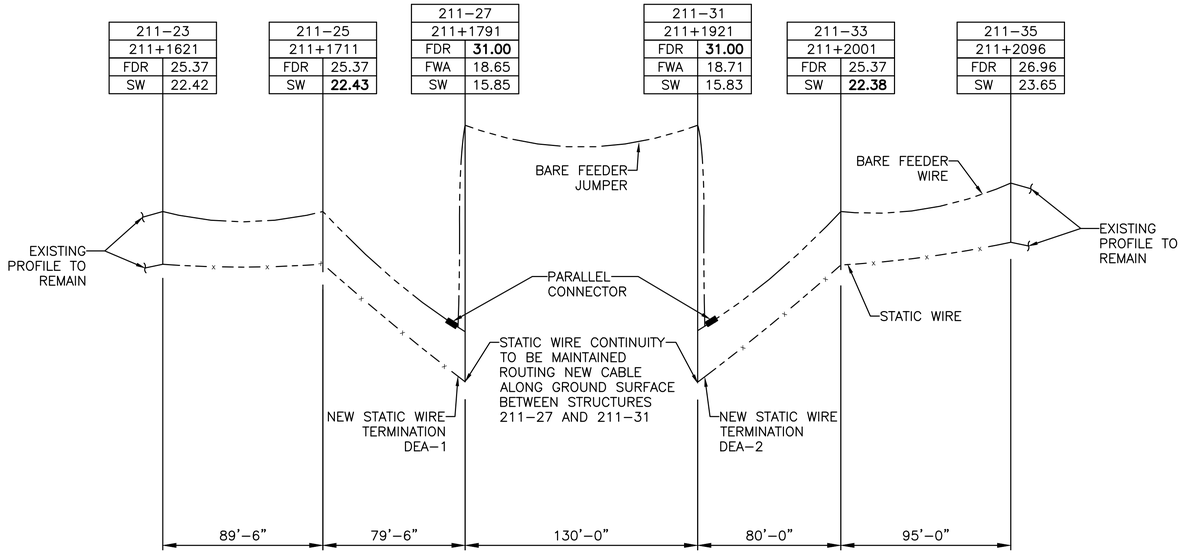

TRACK 1 – ANCILLARY WIRES TEMPORARY PROFILE

SCALE: HORIZ. 1" = 40'–0"
VERT. 1" = 4'–0"

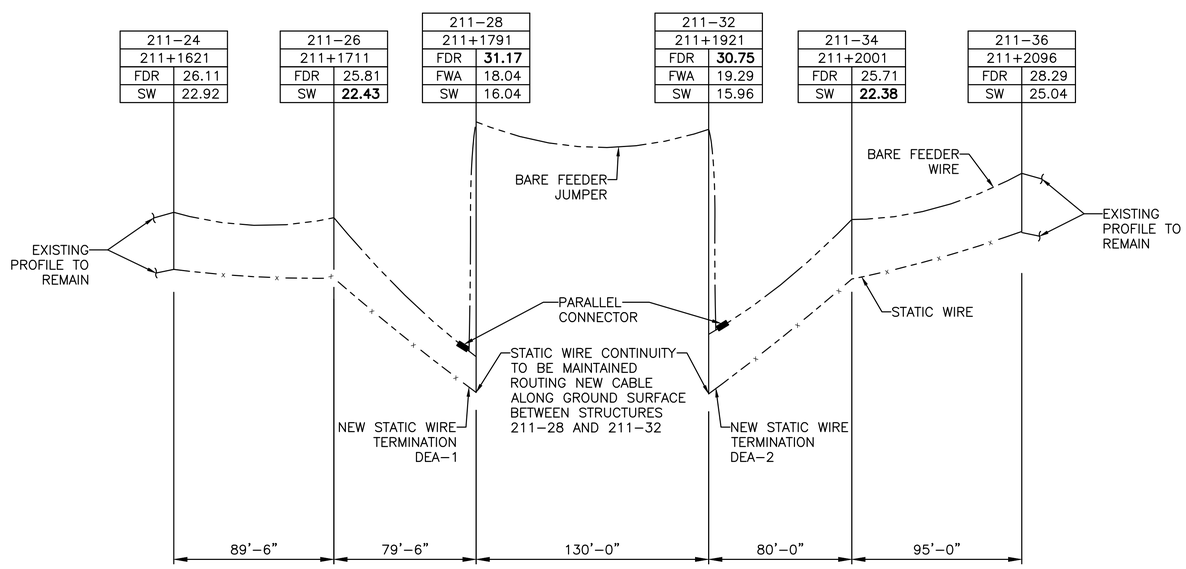

TRACK 2 – ANCILLARY WIRES TEMPORARY PROFILE

SCALE: HORIZ. 1" = 40'–0"
VERT. 1" = 4'–0"

LEGEND:

—— – – – x —— STATIC WIRE

—— – – – – —— FEEDER WIRE

GRAPHIC SCALE:

1" = 40'–0" HORIZONTAL
0 20 40 80 120 160 200 FEET
0 2 4 8 12 16 20
1" = 4'–0" VERTICAL

NOTES:

1. SEE DRAWINGS 48 THROUGH 50 FOR OCS GENERAL NOTES, ABBREVIATIONS, AND LEGEND, RESPECTIVELY.
2. SPAN LENGTHS SHOWN ARE ACTUAL BASED ON SURVEY, WHILE STATIONING OF THE STRUCTURES COMES FROM AMTRAK'S AS–BUILT DRAWINGS. IN SOME CASES THE STATIONING MAY NOT REPRESENT THE PHYSICAL DIFFERENCE BETWEEN THE STRUCTURES.
3. ALL SPAN LENGTHS ARE IN FEET.
4. NORMAL CONDUCTOR PROPERTIES ARE AS FOLLOWS:

ITEM	WEIGHT	TENSION
BARE FEEDER	0.8740 LB/FT	7191 LBS @ 60 °F
		11077 LBS @ –10 °F
STATIC WIRE	0.2920 LB/FT	1775 LBS @ 60 °F
		3376 LBS @ –10 °F

100% SUBMISSION

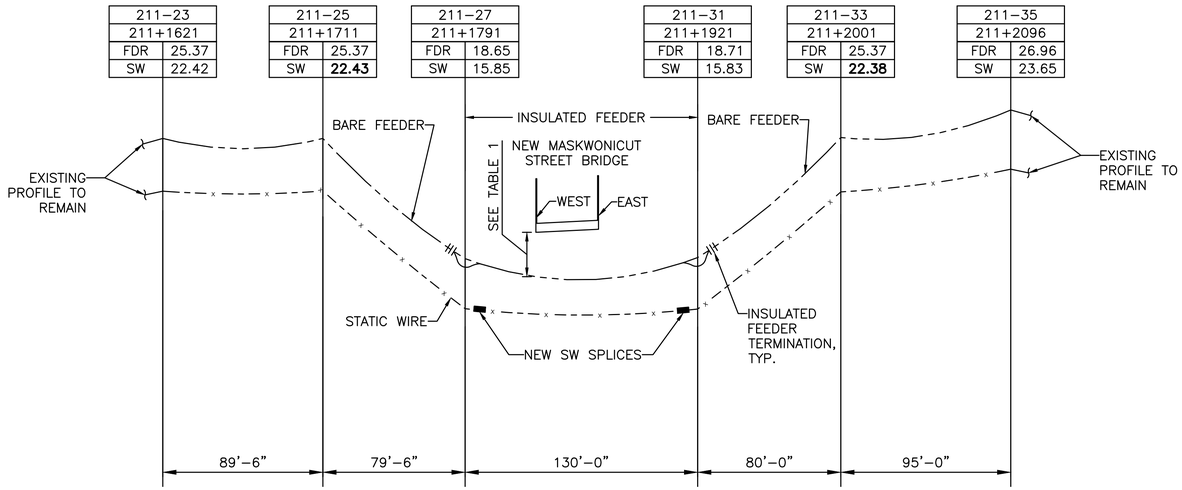

TRACK 1 – ANCILLARY WIRES
FINAL PROFILE

SCALE: HORIZ. 1" = 40'–0"
VERT. 1" = 4'–0"

TABLE 1 – TRACK 1				
BRIDGE CLEARANCES (ANCILLARY)				
WIRE TYPE	BRIDGE FACE	CLEARANCE		
		–10°F	60°F	BRIDGE TO T.O.R.
FEEDER	WEST	2.07	2.44	20.08
	EAST	2.36	2.80	20.29
STATIC	WEST	4.39	4.53	20.08
	EAST	4.63	4.79	20.29

NOTE: LOW TEMP CLEARANCES ARE BASED ON –10°F WITHOUT ICE TO SHOW WORST CASE CONDITION.

TABLE 2 – TRACK 2				
BRIDGE CLEARANCES (ANCILLARY)				
WIRE TYPE	BRIDGE FACE	CLEARANCE		
		–10°F	60°F	BRIDGE TO T.O.R.
FEEDER	WEST	3.09	3.50	20.08
	EAST	2.83	3.24	20.29
STATIC	WEST	5.03	5.18	20.08
	EAST	5.14	5.29	20.29

NOTE: LOW TEMP CLEARANCES ARE BASED ON –10°F WITHOUT ICE TO SHOW WORST CASE CONDITION.

LEGEND:

—— – – – x —— STATIC WIRE

—— – – – —— FEEDER WIRE

GRAPHIC SCALE:

1" = 40'–0" HORIZONTAL
0 20 40 80 120 160 200 FEET
0 2 4 8 12 16 20
1" = 4'–0" VERTICAL

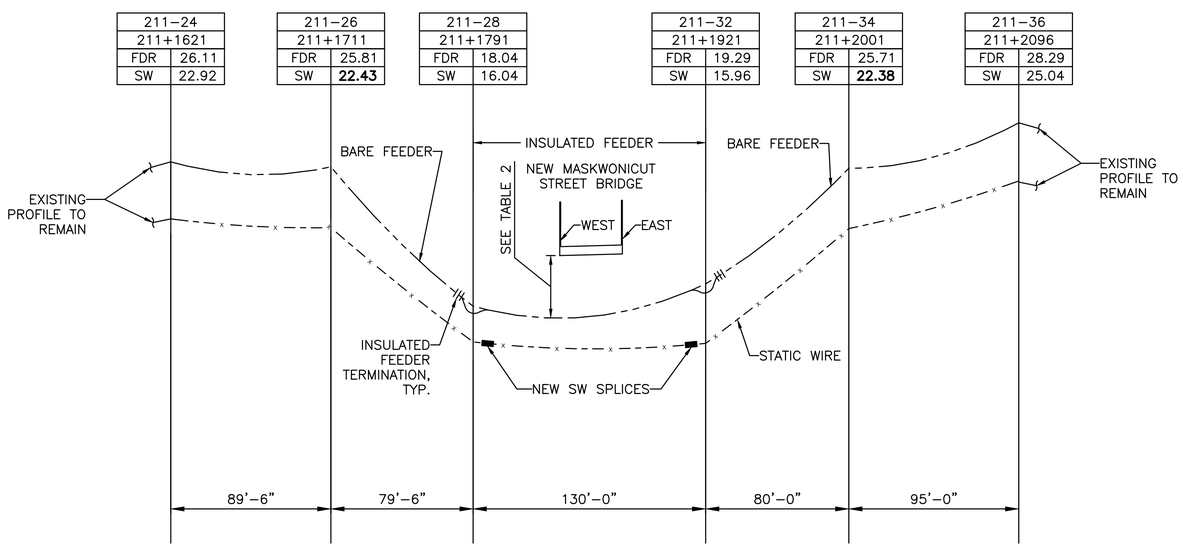

TRACK 2 – ANCILLARY WIRES
FINAL PROFILE

SCALE: HORIZ. 1" = 40'–0"
VERT. 1" = 4'–0"

NOTES:

1. SEE DRAWINGS 48 THROUGH 50 FOR OCS GENERAL NOTES, ABBREVIATIONS, AND LEGEND, RESPECTIVELY.
2. SPAN LENGTHS SHOWN ARE ACTUAL BASED ON SURVEY, WHILE STATIONING OF THE STRUCTURES COMES FROM AMTRAK'S AS–BUILT DRAWINGS. IN SOME CASES THE STATIONING MAY NOT REPRESENT THE PHYSICAL DIFFERENCE BETWEEN THE STRUCTURES.
3. ALL SPAN LENGTHS ARE IN FEET.
4. THE PROPOSED MASKWONICUT STREET BRIDGE IS STEEL CONSTRUCTION AND FLASH PLATES ARE NOT REQUIRED. REFER TO SHEETS 71 AND 72 FOR BRIDGE BONDING AND GROUNDING DETAILS.
5. NORMAL CONDUCTOR PROPERTIES ARE AS FOLLOWS:

ITEM	WEIGHT	TENSION
BARE FEEDER	0.8740 LB/FT	7191 LBS @ 60 °F
		11077 LBS @ –10 °F
MW FOR INSULATED FEEDER	0.8740 LB/FT	6700 LBS @ 60 °F
		10589 LBS @ –10 °F
INSULATED FEEDER	2.9950 LB/FT	N/A
STATIC WIRE	0.2920 LB/FT	1775 LBS @ 60 °F
		3376 LBS @ –10 °F

100% SUBMISSION

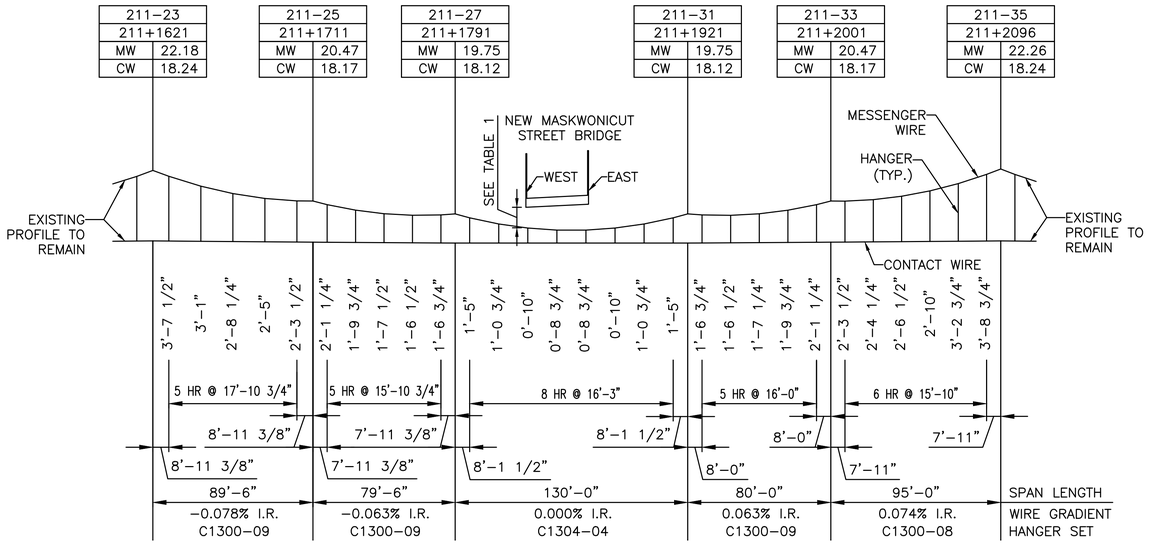

TRACK 1 – WIRE RUN 19/21
FINAL CATENARY PROFILE

SCALE: HORIZ. 1" = 40'–0"
VERT. 1" = 4'–0"

TABLE 1

BRIDGE CLEARANCES WIRE RUN (19/21)

WIRE TYPE	BRIDGE FACE	CLEARANCE		
		–10°F	60°F	BRIDGE TO T.O.R.
MESSENGER	WEST	1.11	1.11	20.08
	EAST	1.44	1.44	20.29

NOTE: LOW TEMP CLEARANCES ARE BASED ON –10°F WITHOUT ICE TO SHOW WORST CASE CONDITION.

LEGEND:

——————— IN–RUNNING CATENARY

GRAPHIC SCALE:

1" = 40'–0" HORIZONTAL
0 20 40 80 120 160 200 FEET
0 2 4 8 12 16 20
1" = 4'–0" VERTICAL

NOTES:

1. SEE DRAWINGS 48 THROUGH 50 FOR OCS GENERAL NOTES, ABBREVIATIONS, AND LEGEND, RESPECTIVELY.
2. SPAN LENGTHS SHOWN ARE ACTUAL BASED ON SURVEY, WHILE STATIONING OF THE STRUCTURES COMES FROM AMTRAK'S AS–BUILT DRAWINGS. IN SOME CASES THE STATIONING MAY NOT REPRESENT THE PHYSICAL DIFFERENCE BETWEEN THE STRUCTURES.
3. ALL SPAN LENGTHS ARE IN FEET.
4. THE PROPOSED MASKWONICUT STREET BRIDGE IS STEEL CONSTRUCTION AND FLASH PLATES ARE NOT REQUIRED. REFER TO SHEETS 71 AND 72 FOR BRIDGE BONDING AND GROUNDING DETAILS.
5. PROPOSED OCS PROFILING OCCURS DURING THE TEMPORARY STAGE AND REMAINS AS A FINAL CONDITION.
6. NORMAL CONDUCTOR PROPERTIES ARE AS FOLLOWS:

ITEM	WEIGHT	TENSION
CONTACT WIRE	0.9076 LB/FT	4400 LBS
MESSENGER WIRE	0.9263 LB/FT	4400 LBS
HANGER	0.0860 LB/FT	N/A

100% SUBMISSION

SHARON
MASKWONICUT STREET BRIDGE
OVER MBTA/AMTRAK RAILROAD

STATE	FED. AID PROJ. NO.	SHEET NO.	TOTAL SHEETS
MASS.	-	61	86
PROJECT FILE NO.		-	

PROPOSED TRACK 2 OCS PROFILES

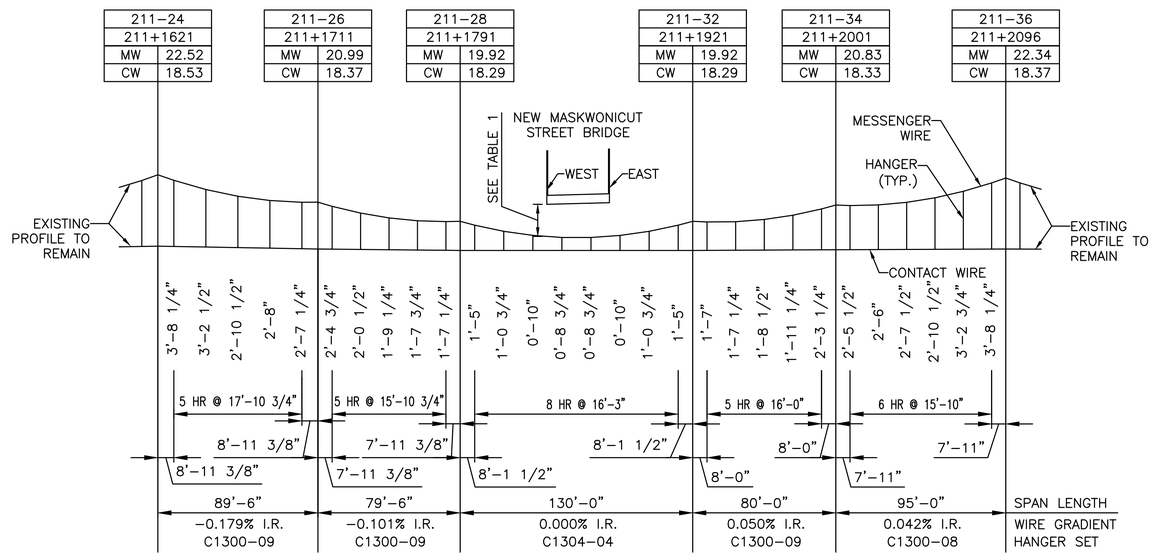

TRACK 2 – WIRE RUN 19/22
FINAL CATENARY PROFILE

SCALE: HORIZ. 1" = 40'–0"
VERT. 1" = 4'–0"

TABLE 1

BRIDGE CLEARANCES WIRE RUN (19/22)

WIRE TYPE	BRIDGE FACE	CLEARANCE		
		–10°F	60°F	BRIDGE TO T.O.R.
MESSENGER	WEST	1.80	1.80	20.87
	EAST	1.88	1.88	20.96

NOTE: LOW TEMP CLEARANCES ARE BASED ON –10°F WITHOUT ICE TO SHOW WORST CASE CONDITION.

LEGEND:

——————— IN–RUNNING CATENARY

GRAPHIC SCALE:

1" = 40'–0" HORIZONTAL
0 20 40 80 120 160 200 FEET
0 2 4 8 12 16 20
1" = 4'–0" VERTICAL

NOTES:

1. SEE DRAWINGS 48 THROUGH 50 FOR OCS GENERAL NOTES, ABBREVIATIONS, AND LEGEND, RESPECTIVELY.
2. SPAN LENGTHS SHOWN ARE ACTUAL BASED ON SURVEY, WHILE STATIONING OF THE STRUCTURES COMES FROM AMTRAK'S AS–BUILT DRAWINGS. IN SOME CASES THE STATIONING MAY NOT REPRESENT THE PHYSICAL DIFFERENCE BETWEEN THE STRUCTURES.
3. ALL SPAN LENGTHS ARE IN FEET.
4. THE PROPOSED MASKWONICUT STREET BRIDGE IS STEEL CONSTRUCTION AND FLASH PLATES ARE NOT REQUIRED. REFER TO SHEETS 71 AND 72 FOR BRIDGE BONDING AND GROUNDING DETAILS.
5. PROPOSED OCS PROFILING OCCURS DURING THE TEMPORARY STAGE AND REMAINS AS A FINAL CONDITION.
6. NORMAL CONDUCTOR PROPERTIES ARE AS FOLLOWS:

ITEM	WEIGHT	TENSION
CONTACT WIRE	0.9076 LB/FT	4400 LBS
MESSENGER WIRE	0.9263 LB/FT	4400 LBS
HANGER	0.0860 LB/FT	N/A

100% SUBMISSION

SHARON
MASKWONICUT STREET BRIDGE
OVER MBTA/AMTRAK RAILROAD

STATE	FED. AID PROJ. NO.	SHEET NO.	TOTAL SHEETS
MASS.	-	62	86
PROJECT FILE NO.		-	

STRUCTURE ERECTION DIAGRAM 211-23 & 24 (FINAL)

DESCRIPTION	TRACK No.1	TRACK No.2
CONTACT WIRE HEIGHT	18.24	18.53
MESSENGER HEIGHT	22.18	22.52
SYSTEM HEIGHT	3.94	3.99
STATIC WIRE HEIGHT	22.42	22.92
FEEDER WIRE HEIGHT	25.37	26.11
SPAN AHEAD	90	90

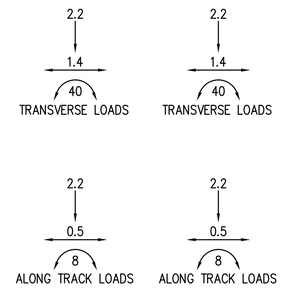

NOTES:

1. STRUCTURE LOADINGS INDICATE THE MAXIMUM DESIGN VALUE FOR THE LONGITUDINAL AND TRANSVERSE DESIGN DIRECTIONS.
2. ALL MOMENTS AND FORCES ARE LOCATED AT THE BASE OF THE POLE, FORCE IS IN KIPS, MOMENT IS IN FT.-KIPS.
3. DIMENSIONS ARE IN FEET EXCEPT SUPERELEVATION WHICH IS IN INCHES AS INDICATED.

STATEMENT OF WORK:

1. RE-PROFILE TRACK 1 AND 2 OCS IN THE SPAN AHEAD.

DESCRIPTION	BILL OF MATERIALS			
	TRACK No.1	QTY.	TRACK No.2	QTY.
COLUMN/POLE	B7638-31	1	B7638-28	1
STRUCTURE FOOTING	B9200-12	1	B9200-15	1
ANCHOR FOOTING				
BWA_AT_MPA				
ANCHOR TYPE				
STRUCTURE/BEAM				
SUPPORT				
CANTILEVER	B0301-02	1	B0301-02	1
CANTILEVER				
CANTILEVER				
REGISTRATION	B3302-01	1	B3301-01	1
REGISTRATION				
REGISTRATION				
FITTING	B0351-10	1	B0351-10	1
FITTING				
FITTING				
STATIC WIRE SUPPORT	B1304-01	1	B1304-01	1
FEEDER WIRE TYPE				
FEEDER WIRE SUPPORT	B2301-09	1	B2301-09	1
JUMPER				
HANGER SET	C1300-09	1	C1300-09	1
HANGER SET	C1300-09	1	C1300-09	1
HANGER SET				
BONDING	C8307-07	1		
BONDING	B1310-01	1	B1310-01	1

SUPPORT/DROP PIPE				
SUPPORT/DROP PIPE				
SWITCHING ASSEMBLY				
AUXILIARY POWER SUPPLY				
INTERLOCK LIGHTING				
ID NUMBER PLATE	S0301-01	1	S0301-01	1
NO TRESPASSING SIGN	S0303-03	1	S0303-03	1
TRACK LOCATION MONUMENT	S0304-01	1	S0304-01	1

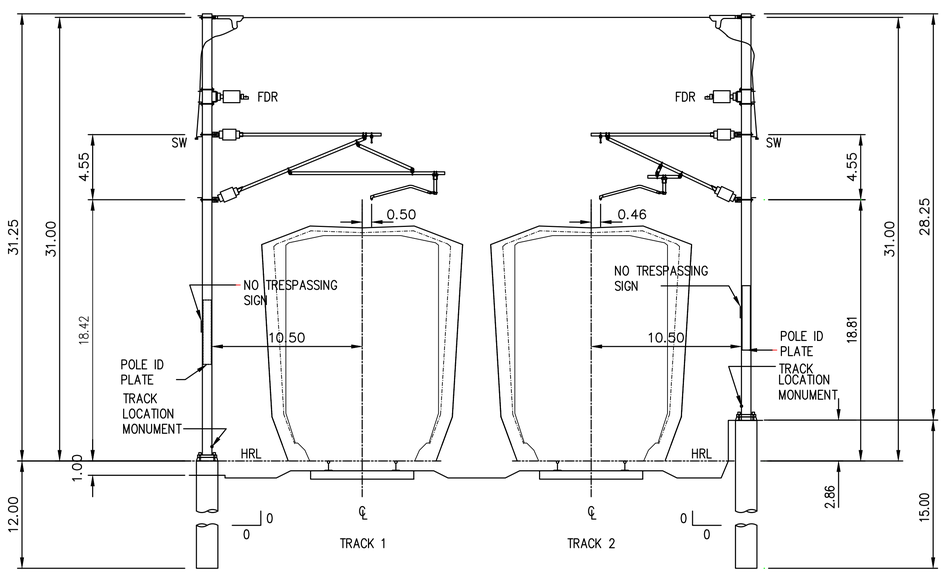

STA. 211+1621 (FINAL)

(LOOKING TOWARDS BOSTON)

NON-POLLUTED	X	NON-EXPOSED	X
POLLUTED		EXPOSED	

0'-0" 5'-0" 10'-0" 15'-0"

SCALE: 1" = 5'-0"

100% SUBMISSION

SED211_1621.DWG Plotted on Nov-20 3:33 PM

CANTILEVER PIPE LENGTHS					
ITEM	LOCATION	VARIABLE LENGTH			
		HP (HORIZONTAL PIPE)	DP (DIAGONAL PIPE)	BP (BRACE PIPE)	VP (VERTICAL PIPE)
B0301–04	TRACK 1	8'–4"	7'–7 3/8"	—	—
B3304–01	TRACK 1	—	—	—	0'–8 5/8"
B0301–04	TRACK 2	10'–7 1/4"	9'–3 1/8"	—	—
B3305–01	TRACK 2	8'–10 7/8"	2'–2 1/2"	—	0'–11 7/8"

NOTE: SEE ASSOCIATED AMTRAK BASIC DESIGN DRAWINGS FOR PIPE LENGTH VARIABLE DESIGNATIONS

DESCRIPTION	TRACK No.1	TRACK No.2
CONTACT WIRE HEIGHT	**18.17**	**18.37**
MESSENGER HEIGHT	**20.47**	**20.99**
SYSTEM HEIGHT	**2.30**	**2.62**
STATIC WIRE HEIGHT	**22.43**	**22.43**
FEEDER WIRE HEIGHT	25.37	25.81
SPAN AHEAD	80	80

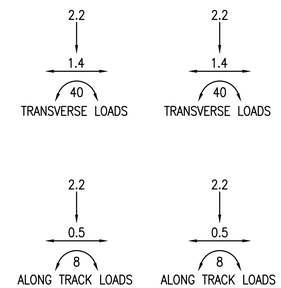

NOTES:

1. STRUCTURE LOADINGS INDICATE THE MAXIMUM DESIGN VALUE FOR THE LONGITUDINAL AND TRANSVERSE DESIGN DIRECTIONS.
2. ALL MOMENTS AND FORCES ARE LOCATED AT THE BASE OF THE POLE, FORCE IS IN KIPS, MOMENT IS IN FT.–KIPS.
3. DIMENSIONS ARE IN FEET EXCEPT SUPERELEVATION WHICH IS IN INCHES AS INDICATED.
4. DEPICTED WORK OCCURS DURING THE TEMPORARY STAGE BUT WILL REMAIN AS A FINAL CONDITION. CANTILEVERS TO BE REPLACED FROM THE PIN CONNECTION, WITH THE EXISTING ASSOCIATED FITTINGS TO REMAIN.

STATEMENT OF WORK:

1. REPLACE TRACK 1 CANTILEVER AND REGISTRATION ARMS TO OBTAIN THE DEPICTED STAGGER. ADJUST HEIGHT OF EXISTING CANTILEVER FITTING AS REQUIRED.
2. RE–PROFILE TRACK 1 OCS IN THE SPAN AHEAD.
3. REPLACE TRACK 2 CANTILEVER AND REGISTRATION ARMS TO OBTAIN THE DEPICTED STAGGER. ADJUST HEIGHT OF EXISTING CANTILEVER FITTING AS REQUIRED.
4. RE–PROFILE TRACK 2 OCS IN THE SPAN AHEAD.

SHARON
MASKWONICUT STREET BRIDGE
OVER MBTA/AMTRAK RAILROAD

STATE	FED. AID PROJ. NO.	SHEET NO.	TOTAL SHEETS
MASS.	-	63	86
PROJECT FILE NO.		-	

STRUCTURE ERECTION DIAGRAM 211-25 & 26 (FINAL)

DESCRIPTION	BILL OF MATERIALS			
	TRACK No.1	QTY.	TRACK No.2	QTY.
COLUMN/POLE	B7638–31	1	B7638–28	1
STRUCTURE FOOTING	B9200–12	1	B9200–15	1
ANCHOR FOOTING				
BWA_AT_MPA				
ANCHOR TYPE				
STRUCTURE/BEAM				
SUPPORT				
CANTILEVER	B0301–04	1	B0301–04	1
CANTILEVER	**B0301–04**	**1**	**B0301–04**	**1**
CANTILEVER				
REGISTRATION	B3304–01	1	B3305–01	1
REGISTRATION	**B3304–01**	**1**	**B3305–01**	**1**
REGISTRATION				
FITTING	B0351–10	1	B0351–10	1
FITTING				
FITTING				
STATIC WIRE SUPPORT	B1304–01	1	B1304–01	1
FEEDER WIRE TYPE				
FEEDER WIRE SUPPORT	B2301–09	1	B2301–09	1
JUMPER				
HANGER SET	C1300–09	1	C1300–09	1
HANGER SET	**C1300–09**	**1**	**C1300–09**	**1**
HANGER SET				
BONDING				
BONDING				

SUPPORT/DROP PIPE				
SUPPORT/DROP PIPE				
SWITCHING ASSEMBLY				
AUXILIARY POWER SUPPLY				
INTERLOCK LIGHTING				
ID NUMBER PLATE	S0301–01	1	S0301–01	1
NO TRESPASSING SIGN	S0303–03	1	S0303–03	1
TRACK LOCATION MONUMENT	S0304–01	1	S0304–01	1

NON–POLLUTED	X	NON–EXPOSED	X
POLLUTED		EXPOSED	

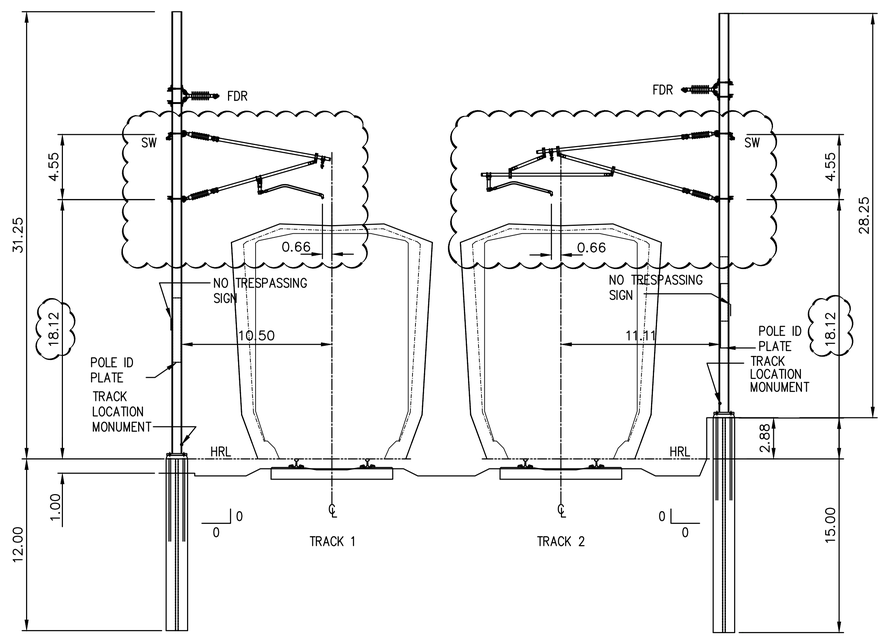

SAND AND GRAVEL
STRUCTURE No. 211–25

STA. 211+1711 (FINAL)
(LOOKING TOWARDS BOSTON)

SAND AND GRAVEL
STRUCTURE No. 211–26

0'–0" 5'–0" 10'–0" 15'–0"
SCALE: 1" = 5'–0"

100% SUBMISSION

SED211_1711 TEMP.DWG Plotted on Nov-20 3:33 PM

SHARON
MASKWONICUT STREET BRIDGE
OVER MBTA/AMTRAK RAILROAD

STATE	FED. AID PROJ. NO.	SHEET NO.	TOTAL SHEETS
MASS.	-	64	86
PROJECT FILE NO.		-	

STRUCTURE ERECTION DIAGRAM 211-27 & 28 (TEMP)

CANTILEVER PIPE LENGTHS					
ITEM	LOCATION	VARIABLE LENGTH			
		HP (HORIZONTAL PIPE)	DP (DIAGONAL PIPE)	BP (BRACE PIPE)	VP (VERTICAL PIPE)
B0302-03	TRACK 1	13'-9 3/8"	13'-4 1/8"	1'-3 1/8"	—
B3302-11	TRACK 1	—	—	—	1'-5 5/8"
B0302-01	TRACK 2	7'-11 7/8"	7'-10 3/4"	2'-5"	—
B3301-11	TRACK 2	—	—	—	1'-5 5/8"

NOTE: SEE ASSOCIATED AMTRAK BASIC DESIGN DRAWINGS FOR PIPE LENGTH VARIABLE DESIGNATIONS

DESCRIPTION	TRACK No.1	TRACK No.2
CONTACT WIRE HEIGHT	18.12	18.29
MESSENGER HEIGHT	19.75	19.92
SYSTEM HEIGHT	1.63	1.63
STATIC WIRE HEIGHT	15.85	16.04
FEEDER WIRE HEIGHT	31.00	31.17
SPAN AHEAD	130	130

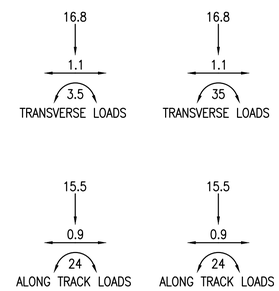

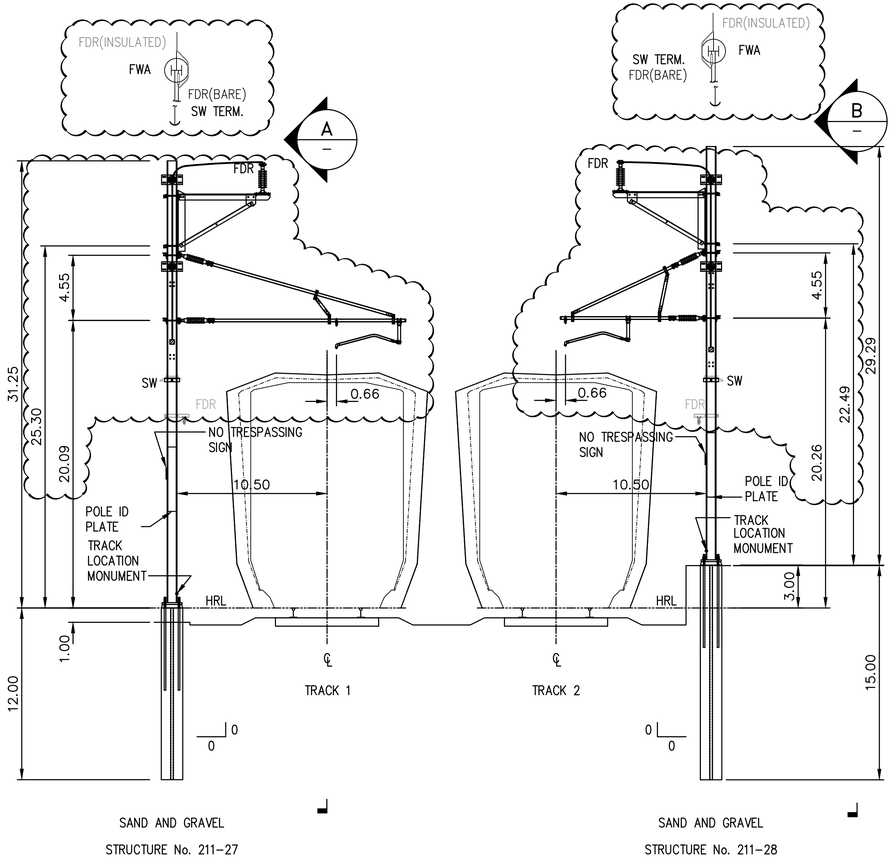

STA. 211+1791 (TEMP)
(LOOKING TOWARDS BOSTON)

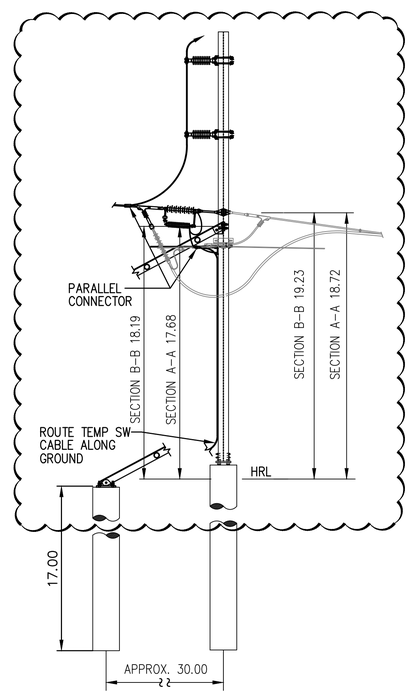

SECTION A-A
SECTION B-B

NOTES:

1. STRUCTURE LOADINGS INDICATE THE MAXIMUM DESIGN VALUE FOR THE LONGITUDINAL AND TRANSVERSE DESIGN DIRECTIONS.
2. ALL MOMENTS AND FORCES ARE LOCATED AT THE BASE OF THE POLE, FORCE IS IN KIPS, MOMENT IS IN FT.-KIPS.
3. DIMENSIONS ARE IN FEET EXCEPT SUPERELEVATION WHICH IS IN INCHES AS INDICATED.
4. POST INSULATOR TO BE MOUNTED ON SUPPORT CHANNEL IN A POSITION ROTATED 90 DEGREES FROM AMTRAK'S STANDARD BASIC DESIGN DETAIL (B2301-25) FOR VERTICAL WIRE ROUTING UP THE POLE.
5. CANTILEVERS TO BE REPLACED FROM THE PIN CONNECTION. EXISTING ASSOCIATED FITTINGS TO REMAIN.

STATEMENT OF WORK:

1. REPLACE TRACK 1 CANTILEVER AND REGISTRATION ARMS TO OBTAIN THE DEPICTED STAGGER.
2. RE-PROFILE TRACK 1 OCS IN THE SPAN AHEAD.
3. REPLACE TRACK 2 CANTILEVER AND REGISTRATION ARMS TO OBTAIN THE DEPICTED STAGGER.
4. RE-PROFILE TRACK 2 OCS IN THE SPAN AHEAD.
5. REPLACE EXISTING DOWN GUY ASSEMBLIES WITH NEW COMPRESSION STRUT ASSEMBLIES AT BOTH STRUCTURES.
6. REMOVE EXISTING TRACK 1 STATIC WIRE SUPPORT ASSEMBLY AND INSTALL NEW STATIC WIRE TERMINATION BRACKET. CUT STATIC WIRE AND TERMINATE TO ACHIEVE THE PROPOSED TEMPORARY WIRE HEIGHT. RUN NEW STATIC WIRE FROM STRUCTURE 211-27 TO STRUCTURE 211-31 ALONG THE GROUND SURFACE.
7. REMOVE EXISTING TRACK 2 STATIC WIRE SUPPORT ASSEMBLY AND INSTALL NEW STATIC WIRE TERMINATION BRACKET. CUT STATIC WIRE AND TERMINATE TO ACHIEVE THE PROPOSED TEMPORARY WIRE HEIGHT. RUN NEW STATIC WIRE FROM STRUCTURE 211-28 TO STRUCTURE 211-32 ALONG THE GROUND SURFACE.
8. INSTALL NEW TRACK 1 LONG FEEDER BRACKET ASSEMBLY AND POST INSULATORS FOR CABLE ROUTING.
9. UNBOLT 4 HOLE LUG OF EXISTING INSULATED NEGATIVE FEEDER TERMINATION (LOCATED AFTER BARE FEEDER STRAIN CLAMPS) AT STRUCTURE 211-27. INSTALL A SLACK BARE FEEDER SPAN USING THE LONG FEEDER BRACKET SUPPORT FROM STRUCTURE 211-27 TO 211-31. ROUTE THE BARE FEEDER DOWN THE COLUMN AND CONNECT TO THE TERMINATED BARE FEEDER TO ENSURE SUPPLY CONTINUITY. REMOVE TRACK 1 INSULATED FEEDER CABLE BETWEEN STRUCTURES 211-27 AND 211-31. PROTECT ALL ELEMENTS OF THE INSULATED NEGATIVE FEEDER TERMINATION ASSEMBLY FOR RE-INSTALLATION IN THE FINAL CONDITION. (IF AMTRAK PERMITS AND IT IS DEEMED FEASIBLE, IT MAY BE POSSIBLE TO LEAVE THE TRACK 1 INSULATED FEEDER SPAN IN PLACE AND INSTEAD INSTALL PULLOFFS FROM THE TRACK 2 FEEDER TO FREE UP THE ABUTMENT FOR DEMOLITION.)
10. INSTALL NEW TRACK 2 LONG FEEDER BRACKET ASSEMBLY AND POST INSULATORS FOR CABLE ROUTING.
11. UNBOLT 4 HOLE LUG OF EXISTING INSULATED NEGATIVE FEEDER TERMINATION (LOCATED AFTER BARE FEEDER STRAIN CLAMPS) AT STRUCTURE 211-28. INSTALL A SLACK BARE FEEDER SPAN USING THE LONG FEEDER BRACKET SUPPORT FROM STRUCTURE 211-28 TO 211-32. ROUTE THE BARE FEEDER DOWN THE COLUMN AND CONNECT TO THE TERMINATED BARE FEEDER TO ENSURE SUPPLY CONTINUITY. REMOVE TRACK 2 INSULATED FEEDER CABLE BETWEEN STRUCTURES 211-28 AND 211-32. PROTECT ALL ELEMENTS OF THE INSULATED NEGATIVE FEEDER TERMINATION ASSEMBLY FOR RE-INSTALLATION IN THE FINAL CONDITION. (IF AMTRAK PERMITS AND IT IS DEEMED FEASIBLE, IT MAY BE POSSIBLE TO LEAVE THE TRACK 2 INSULATED FEEDER SPAN IN PLACE AND INSTEAD INSTALL PULLOFFS FROM THE TRACK 1 FEEDER TO FREE UP THE ABUTMENT FOR DEMOLITION.)

DESCRIPTION	BILL OF MATERIALS			
	TRACK No.1	QTY.	TRACK No.2	QTY.
COLUMN/POLE	B7662-D44	1	B7662-G58	1
STRUCTURE FOOTING	B9200-12	1	B9200-15	1
ANCHOR FOOTING	B9207-17	1	B9207-17	1
BWA_AT_MPA				
ANCHOR TYPE	DEA-1	1	DEA-1	1
STRUCTURE/BEAM				
SUPPORT				
CANTILEVER	B0306-03	1	B0305-01	1
CANTILEVER	B0302-03	1	B0302-01	1
CANTILEVER				
REGISTRATION	B3310-12	1	B3309-02	1
REGISTRATION	B3302-11	1	B3301-11	1
REGISTRATION				
FITTING	B0351-02	1	B0351-02	1
FITTING	C2337-01	1	C2337-01	1
FITTING	C2516-01	1C	C2516-01	1C
FITTING	C2516-09	1	C2516-09	1
STATIC WIRE TYPE	9401FET	175	9401FET	175
STATIC WIRE SUPPORT	B1301-01	1	B1301-01	1
STATIC WIRE SUPPORT	C0429-01	1	C0429-01	1
FEEDER WIRE TYPE	9402FET	175	9402FET	175
FEEDER WIRE TYPE				
FEEDER WIRE SUPPORT	B2304-24	1	B2304-24	1
FEEDER WIRE SUPPORT	B2303-05	1	B2303-05	1
FEEDER WIRE SUPPORT	B2301-25	2	B2301-25	2
FEEDER WIRE SUPPORT	C0418-01	1	C0418-01	1
JUMPER				
HANGER SET	C1303-01	1	C1303-01	1
HANGER SET	C1304-04	1	C1304-04	1
HANGER SET				
BONDING	C8311-01	1	C8311-01	1
BONDING				

SUPPORT/DROP PIPE	CSA-1	1	CSA-1	1
SUPPORT/DROP PIPE				
SWITCHING ASSEMBLY				
AUXILIARY POWER SUPPLY				
INTERLOCK LIGHTING				
ID NUMBER PLATE	S0301-01	1	S0301-01	1
NO TRESPASSING SIGN	S0303-03	1	S0303-03	1
TRACK LOCATION MONUMENT	S0304-01	1	S0304-01	1

0'-0" 5'-0" 10'-0" 15'-0"
SCALE: 1" = 5'-0"

NON-POLLUTED	X	NON-EXPOSED	X
POLLUTED		EXPOSED	

100% SUBMISSION

SED211_1791 TEMP.DWG Plotted on Nov-20 3:34 PM

SHARON
MASKWONICUT STREET BRIDGE
OVER MBTA/AMTRAK RAILROAD

STATE	FED. AID PROJ. NO.	SHEET NO.	TOTAL SHEETS
MASS.	-	65	86
PROJECT FILE NO.		-	

STRUCTURE ERECTION DIAGRAM 211-27 & 28 (FINAL)

CANTILEVER PIPE LENGTHS					
ITEM	LOCATION	VARIABLE LENGTH			
		HP (HORIZONTAL PIPE)	DP (DIAGONAL PIPE)	BP (BRACE PIPE)	VP (VERTICAL PIPE)
B0302-03	TRACK 1	13'-9 3/8"	13'-4 1/8"	1'-3 1/8"	—
B3302-11	TRACK 1	—	—	—	1'-5 5/8"
B0302-01	TRACK 2	7'-11 7/8"	7'-10 3/4"	2'-5"	—
B3301-11	TRACK 2	—	—	—	1'-5 5/8"

NOTE: SEE ASSOCIATED AMTRAK BASIC DESIGN DRAWINGS FOR PIPE LENGTH VARIABLE DESIGNATIONS

DESCRIPTION	TRACK No.1	TRACK No.2
CONTACT WIRE HEIGHT	18.12	18.29
MESSENGER HEIGHT	19.75	19.92
SYSTEM HEIGHT	1.63	1.63
STATIC WIRE HEIGHT	15.85	16.04
FEEDER WIRE HEIGHT	18.65	18.04
SPAN AHEAD	130	130

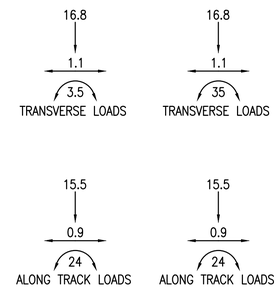

NOTES:

1. STRUCTURE LOADINGS INDICATE THE MAXIMUM DESIGN VALUE FOR THE LONGITUDINAL AND TRANSVERSE DESIGN DIRECTIONS.
2. ALL MOMENTS AND FORCES ARE LOCATED AT THE BASE OF THE POLE, FORCE IS IN KIPS, MOMENT IS IN FT.-KIPS.
3. DIMENSIONS ARE IN FEET EXCEPT SUPERELEVATION WHICH IS IN INCHES AS INDICATED.
4. WITH THE EXCEPTION OF THE STATIC WIRE SPLICES, NO NEW MATERIAL IS REQUIRED TO ACHIEVE THE FINAL CONDITION. CLOUDS REPRESENT CHANGES FROM AMTRAK'S EXISTING RECORD DRAWING. THE STATEMENT OF WORK DESCRIBES REMOVAL OF TEMPORARY MATERIAL AND RE-INSTALLATION OF PREVIOUSLY REMOVED MATERIAL DURING THE TEMPORARY STAGE.

STATEMENT OF WORK:

1. RE-INSTALL PREVIOUSLY REMOVED STATIC WIRE SUPPORT ASSEMBLY. SPLICE-IN NEW TRACK 1 STATIC WIRE AND TRANSFER SUPPORT TO RE-INSTALLED ASSEMBLY. REMOVE STATIC WIRE PREVIOUSLY ROUTED ALONG THE GROUND SURFACE FROM STRUCTURE 211-27 TO STRUCTURE 211-31.
2. RE-INSTALL PREVIOUSLY REMOVED STATIC WIRE SUPPORT ASSEMBLY. SPLICE-IN NEW TRACK 2 STATIC WIRE AND TRANSFER SUPPORT TO RE-INSTALLED ASSEMBLY. REMOVE STATIC WIRE PREVIOUSLY ROUTED ALONG THE GROUND SURFACE FROM STRUCTURE 211-28 TO STRUCTURE 211-32.
3. RE-INSTALL PREVIOUSLY REMOVED TRACK 1 INSULATED FEEDER WIRE TERMINATION ASSEMBLY. INSTALL INSULATED FEEDER CABLE WITH SUPPORTING MESSENGER BETWEEN STRUCTURE 211-27 AND STRUCTURE 211-31. REMOVE LONG FEEDER BRACKET, POST INSULATORS, AND TEMPORARY BARE FEEDER SLACK SPAN.
4. RE-INSTALL PREVIOUSLY REMOVED TRACK 2 INSULATED FEEDER WIRE TERMINATION ASSEMBLY. INSTALL INSULATED FEEDER CABLE WITH SUPPORTING MESSENGER BETWEEN STRUCTURE 211-28 AND STRUCTURE 211-32. REMOVE LONG FEEDER BRACKET, POST INSULATORS, AND TEMPORARY BARE FEEDER SLACK SPAN.

DESCRIPTION	BILL OF MATERIALS			
	TRACK No.1	QTY.	TRACK No.2	QTY.
COLUMN/POLE	B7662-D44	1	B7662-C58	1
STRUCTURE FOOTING	B9200-12	1	B9200-15	1
ANCHOR FOOTING	B9207-17	1	B9207-17	1
BWA_AT_MPA				
ANCHOR TYPE				
STRUCTURE/BEAM				
SUPPORT				
CANTILEVER	B0306-03	1	B0305-01	1
CANTILEVER	B0302-03	1	B0302-01	1
CANTILEVER				
REGISTRATION	B3310-12	1	B3309-02	1
REGISTRATION	B3302-11	1	B3301-11	1
REGISTRATION				
FITTING	B0351-02	1	B0351-02	1
FITTING				
FITTING				
STATIC WIRE SUPPORT	B1301-01	1	B1301-01	1
STATIC WIRE SPLICE	C0432-01	1	C0432-01	1
FEEDER WIRE TYPE				
FEEDER WIRE SUPPORT	B2304-24	1	B2304-24	1
JUMPER				
HANGER SET	C1303-01	1	C1303-01	1
HANGER SET	C1304-04	1	C1304-04	1
HANGER SET				
BONDING	C8311-01	1	C8311-01	1
BONDING				
SUPPORT/DROP PIPE	CSA-1	1	CSA-1	1
SUPPORT/DROP PIPE				
SWITCHING ASSEMBLY				
AUXILIARY POWER SUPPLY				
INTERLOCK LIGHTING				
ID NUMBER PLATE	S0301-01	1	S0301-01	1
NO TRESPASSING SIGN	S0303-03	1	S0303-03	1
TRACK LOCATION MONUMENT	S0304-01	1	S0304-01	1

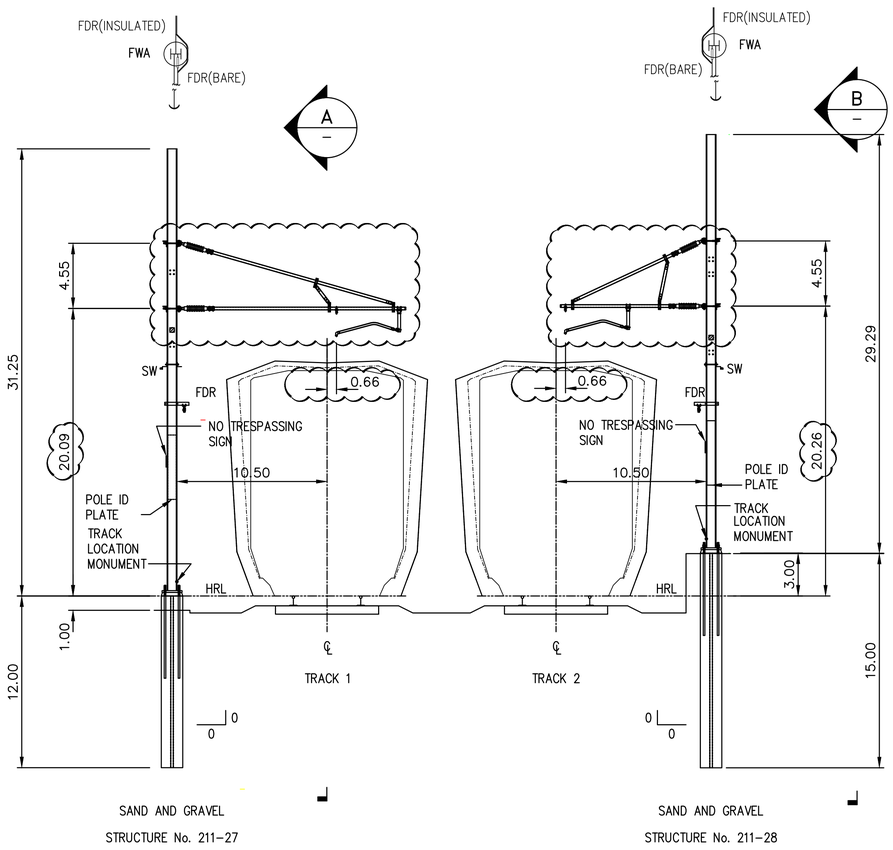

STA. 211+1791 (FINAL)
(LOOKING TOWARDS BOSTON)

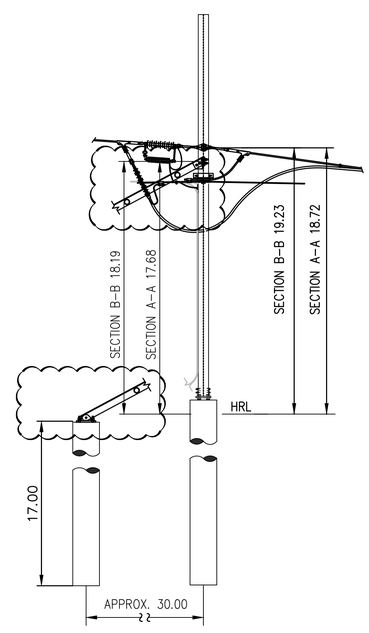

SECTION A-A
SECTION B-B

NON-POLLUTED	X	NON-EXPOSED	X
POLLUTED		EXPOSED	

0'-0" 5'-0" 10'-0" 15'-0"
SCALE: 1" = 5'-0"

100% SUBMISSION

SED211_1791 (FINAL).DWG Plotted on Nov-20 3:34 PM

SHARON
MASKWONICUT STREET BRIDGE
OVER MBTA/AMTRAK RAILROAD

STATE	FED. AID PROJ. NO.	SHEET NO.	TOTAL SHEETS
MASS.	-	66	86
PROJECT FILE NO.		-	

STRUCTURE ERECTION DIAGRAM 211-31 & 32 (TEMP)

CANTILEVER PIPE LENGTHS					
ITEM	LOCATION	VARIABLE LENGTH			
		HP (HORIZONTAL PIPE)	DP (DIAGONAL PIPE)	BP (BRACE PIPE)	VP (VERTICAL PIPE)
B0302-01	TRACK 1	8'-5 5/8"	8'-3 5/8"	2'-5 1/2"	—
B3301-12	TRACK 1	—	—	—	1'-5 5/8"
B0302-03	TRACK 2	13'-6 3/4"	12'-10"	1'-7/8"	—
B3301-12	TRACK 2	—	—	—	1'-5 5/8"

NOTE: SEE ASSOCIATED AMTRAK BASIC DESIGN DRAWINGS FOR PIPE LENGTH VARIABLE DESIGNATIONS

DESCRIPTION	TRACK No.1	TRACK No.2
CONTACT WIRE HEIGHT	18.12	18.29
MESSENGER HEIGHT	19.75	19.92
SYSTEM HEIGHT	1.63	1.63
STATIC WIRE HEIGHT	15.83	15.96
FEEDER WIRE HEIGHT	31.00	30.75
SPAN AHEAD	80	80

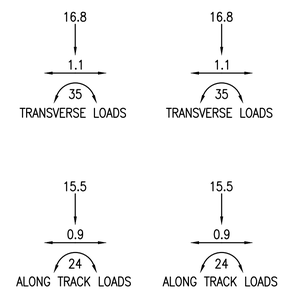

NOTES:

1. STRUCTURE LOADINGS INDICATE THE MAXIMUM DESIGN VALUE FOR THE LONGITUDINAL AND TRANSVERSE DESIGN DIRECTIONS.
2. ALL MOMENTS AND FORCES ARE LOCATED AT THE BASE OF THE POLE, FORCE IS IN KIPS, MOMENT IS IN FT.-KIPS.
3. DIMENSIONS ARE IN FEET EXCEPT SUPERELEVATION WHICH IS IN INCHES AS INDICATED.
4. POST INSULATOR TO BE MOUNTED ON SUPPORT CHANNEL IN A POSITION ROTATED 90 DEGREES FROM AMTRAK'S STANDARD BASIC DESIGN DETAIL (B2301-14) FOR VERTICAL WIRE ROUTING UP THE POLE.
5. CANTILEVERS TO BE REPLACED FROM THE PIN CONNECTION. EXISTING ASSOCIATED FITTINGS TO REMAIN.

STATEMENT OF WORK:

1. REPLACE TRACK 1 CANTILEVER AND REGISTRATION ARMS TO OBTAIN THE DEPICTED STAGGER.
2. RE-PROFILE TRACK 1 OCS IN THE SPAN AHEAD.
3. REPLACE TRACK 2 CANTILEVER AND REGISTRATION ARMS TO OBTAIN THE DEPICTED STAGGER.
4. RE-PROFILE TRACK 2 OCS IN THE SPAN AHEAD.
5. REPLACE EXISTING DOWN GUY ASSEMBLIES WITH NEW COMPRESSION STRUT ASSEMBLIES AT BOTH STRUCTURES.
6. REMOVE EXISTING TRACK 1 STATIC WIRE SUPPORT ASSEMBLY AND INSTALL NEW STATIC WIRE TERMINATION BRACKET. CUT STATIC WIRE AND TERMINATE TO ACHIEVE THE PROPOSED TEMPORARY WIRE HEIGHT. CONNECT STATIC WIRE TERMINATION TO TEMPORARY STATIC WIRE ROUTED ALONG THE GROUND SURFACE FROM PREVIOUS STRUCTURE USING PARALLEL CONNECTOR.
7. REMOVE EXISTING TRACK 2 STATIC WIRE SUPPORT ASSEMBLY AND INSTALL NEW STATIC WIRE TERMINATION BRACKET. CUT STATIC WIRE AND TERMINATE TO ACHIEVE THE PROPOSED TEMPORARY WIRE HEIGHT. CONNECT STATIC WIRE TERMINATION TO TEMPORARY STATIC WIRE ROUTED ALONG THE GROUND SURFACE FROM PREVIOUS STRUCTURE USING PARALLEL CONNECTOR.
8. INSTALL NEW TRACK 1 LONG FEEDER BRACKET ASSEMBLY AND POST INSULATORS FOR CABLE ROUTING.
9. UNBOLT 4 HOLE LUG OF EXISTING INSULATED NEGATIVE FEEDER TERMINATION (LOCATED AFTER BARE FEEDER STRAIN CLAMPS) AT STRUCTURE 211-31. INSTALL A SLACK BARE FEEDER SPAN USING THE LONG FEEDER BRACKET SUPPORT FROM STRUCTURE 211-27 TO 211-31. ROUTE THE BARE FEEDER DOWN THE COLUMN AND CONNECT TO THE TERMINATED BARE FEEDER TO ENSURE SUPPLY CONTINUITY. REMOVE TRACK 1 INSULATED FEEDER CABLE BETWEEN STRUCTURES 211-27 AND 211-31. PROTECT ALL ELEMENTS OF THE INSULATED NEGATIVE FEEDER TERMINATION ASSEMBLY FOR RE-INSTALLATION IN THE FINAL CONDITION. (IF AMTRAK PERMITS AND IT IS DEEMED FEASIBLE, IT MAY BE POSSIBLE TO LEAVE THE INSULATED FEEDER SPAN IN PLACE AND INSTEAD INSTALL PULLOFFS FROM THE CATENARY TO FREE UP THE ABUTMENT FOR DEMOLITION.)
10. INSTALL NEW TRACK 2 LONG FEEDER BRACKET ASSEMBLY AND POST INSULATORS FOR CABLE ROUTING.
11. UNBOLT 4 HOLE LUG OF EXISTING INSULATED NEGATIVE FEEDER TERMINATION (LOCATED AFTER BARE FEEDER STRAIN CLAMPS) AT STRUCTURE 211-32. INSTALL A SLACK BARE FEEDER SPAN USING THE LONG FEEDER BRACKET SUPPORT FROM STRUCTURE 211-28 TO 211-32. ROUTE THE BARE FEEDER DOWN THE COLUMN AND CONNECT TO THE TERMINATED BARE FEEDER TO ENSURE SUPPLY CONTINUITY. REMOVE TRACK 2 INSULATED FEEDER CABLE BETWEEN STRUCTURES 211-28 AND 211-32. PROTECT ALL ELEMENTS OF THE INSULATED NEGATIVE FEEDER TERMINATION ASSEMBLY FOR RE-INSTALLATION IN THE FINAL CONDITION. (IF AMTRAK PERMITS AND IT IS DEEMED FEASIBLE, IT MAY BE POSSIBLE TO LEAVE THE INSULATED FEEDER SPAN IN PLACE AND INSTEAD INSTALL PULLOFFS FROM THE CATENARY TO FREE UP THE ABUTMENT FOR DEMOLITION.)

DESCRIPTION	BILL OF MATERIALS			
	TRACK No.1	QTY.	TRACK No.2	QTY.
COLUMN/POLE	B7663-D44	1	B7663-D42	1
STRUCTURE FOOTING	B9203-13	1	B9203-13	1
ANCHOR FOOTING	B9207-17	1	B9207-17	1
BWA_AT_MPA				
ANCHOR TYPE	DEA-2	1	DEA-2	1
STRUCTURE/BEAM				
SUPPORT				
CANTILEVER	B0305-01	1	B0306-03	1
CANTILEVER	B0302-01	1	B0302-03	1
CANTILEVER				
REGISTRATION	B3309-02	1	B3310-12	1
REGISTRATION	B3301-12	1	B3302-12	1
REGISTRATION				
FITTING	B0351-06	1	B0351-06	1
FITTING	C2337-02	1	C2337-02	1
FITTING	C2516-01	1C	C2516-01	1C
FITTING	C2516-09	1	C2516-09	1
STATIC WIRE SUPPORT	B1301-03	1	B1301-03	1
STATIC WIRE SUPPORT	C0429-01	1	C0429-01	1
FEEDER WIRE TYPE				
FEEDER WIRE SUPPORT	B2304-02	1	B2304-02	1
FEEDER WIRE SUPPORT	B2303-05	1	B2303-05	1
FEEDER WIRE SUPPORT	B2301-14	2	B2301-14	2
FEEDER WIRE SUPPORT	C0418-01	1	C0418-01	1
JUMPER				
HANGER SET	C1303-01	1	C1303-01	1
HANGER SET	C1300-09	1	C1300-09	1
HANGER SET	C1300-09	1	C1300-09	1
BONDING	C8311-01	1	C8311-01	1
BONDING				

SUPPORT/DROP PIPE	CSA-1	1	CSA-1	1
SUPPORT/DROP PIPE				
SWITCHING ASSEMBLY				
AUXILIARY POWER SUPPLY				
INTERLOCK LIGHTING				
ID NUMBER PLATE	S0301-01	1	S0301-01	1
NO TRESPASSING SIGN	S0303-03	1	S0303-03	1
TRACK LOCATION MONUMENT	S0304-01	1	S0304-01	1

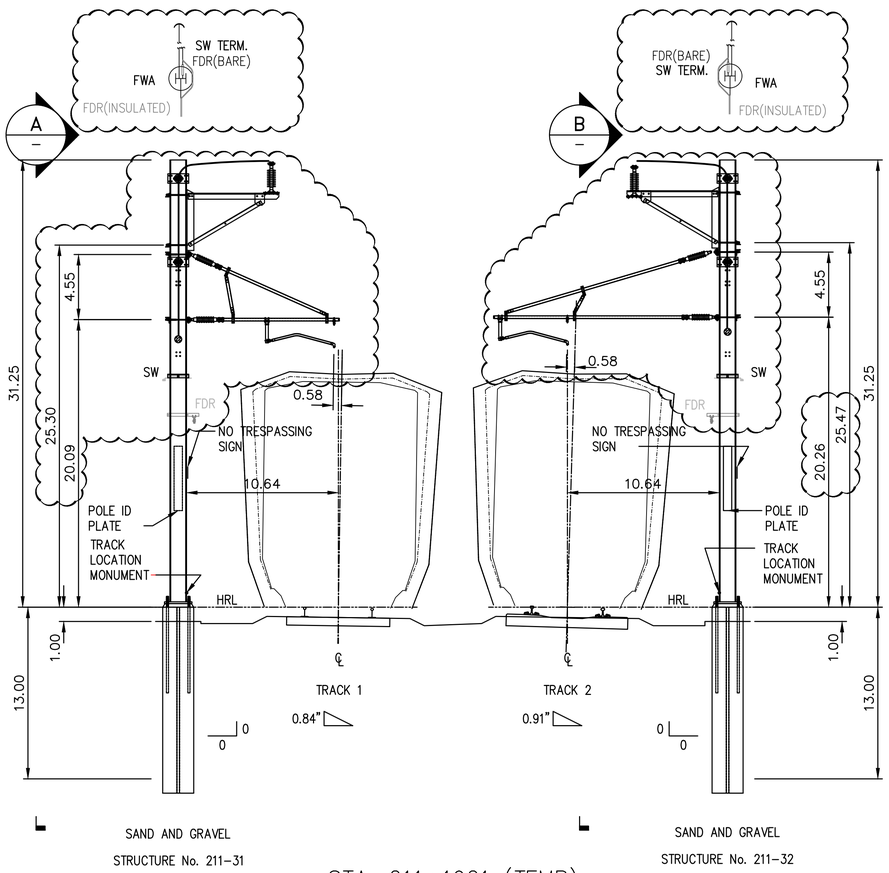

STA. 211+1921 (TEMP)
(LOOKING TOWARDS BOSTON)

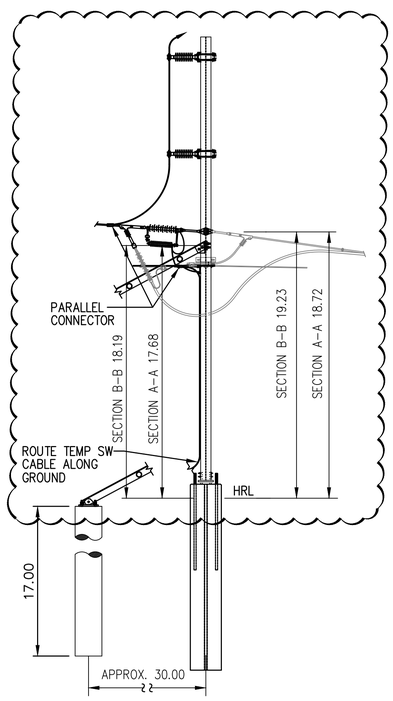

SECTION A-A
SECTION B-B

NON-POLLUTED	X	NON-EXPOSED	X
POLLUTED		EXPOSED	

0'-0" 5'-0" 10'-0" 15'-0"
SCALE: 1" = 5'-0"

100% SUBMISSION

SED211_1921 TEMP.DWG Plotted on Nov-20 3:35 PM

SHARON
MASKWONICUT STREET BRIDGE
OVER MBTA/AMTRAK RAILROAD

STATE	FED. AID PROJ. NO.	SHEET NO.	TOTAL SHEETS
MASS.	-	67	86
PROJECT FILE NO.		-	

STRUCTURE ERECTION DIAGRAM 211-31 & 32 (FINAL)

CANTILEVER PIPE LENGTHS					
ITEM	LOCATION	VARIABLE LENGTH			
		HP (HORIZONTAL PIPE)	DP (DIAGONAL PIPE)	BP (BRACE PIPE)	VP (VERTICAL PIPE)
B0302-01	TRACK 1	8'-5 5/8"	8'-3 5/8"	2'-5 1/2"	—
B3301-12	TRACK 1	—	—	—	1'-5 1/2"
B0302-03	TRACK 2	13'-6 3/4"	12'-10"	1'-7/8"	—
B3301-12	TRACK 2	—	—	—	1'-5 1/2"

NOTE: SEE ASSOCIATED AMTRAK BASIC DESIGN DRAWINGS FOR PIPE LENGTH VARIABLE DESIGNATIONS

DESCRIPTION	TRACK No.1	TRACK No.2
CONTACT WIRE HEIGHT	18.12	18.29
MESSENGER HEIGHT	19.75	19.92
SYSTEM HEIGHT	1.63	1.63
STATIC WIRE HEIGHT	15.83	15.96
FEEDER WIRE HEIGHT	18.71	19.29
SPAN AHEAD	80	80

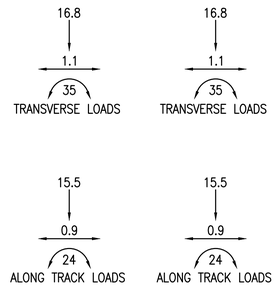

NOTES:

1. STRUCTURE LOADINGS INDICATE THE MAXIMUM DESIGN VALUE FOR THE LONGITUDINAL AND TRANSVERSE DESIGN DIRECTIONS.
2. ALL MOMENTS AND FORCES ARE LOCATED AT THE BASE OF THE POLE, FORCE IS IN KIPS, MOMENT IS IN FT.-KIPS.
3. DIMENSIONS ARE IN FEET EXCEPT SUPERELEVATION WHICH IS IN INCHES AS INDICATED.
4. WITH THE EXCEPTION OF THE STATIC WIRE SPLICES, NO NEW MATERIAL IS REQUIRED TO ACHIEVE THE FINAL CONDITION. CLOUDS REPRESENT CHANGES FROM AMTRAK'S EXISTING RECORD DRAWING. THE STATEMENT OF WORK DESCRIBES REMOVAL OF TEMPORARY MATERIAL AND RE-INSTALLATION OF PREVIOUSLY REMOVED MATERIAL DURING THE TEMPORARY STAGE.

STATEMENT OF WORK:

1. RE-INSTALL PREVIOUSLY REMOVED STATIC WIRE SUPPORT ASSEMBLY. SPLICE-IN NEW TRACK 1 STATIC WIRE AND TRANSFER SUPPORT TO RE-INSTALLED ASSEMBLY. REMOVE STATIC WIRE PREVIOUSLY ROUTED ALONG THE GROUND SURFACE FROM STRUCTURE 211-27 TO STRUCTURE 211-31.
2. RE-INSTALL PREVIOUSLY REMOVED STATIC WIRE SUPPORT ASSEMBLY. SPLICE-IN NEW TRACK 2 STATIC WIRE AND TRANSFER SUPPORT TO RE-INSTALLED ASSEMBLY. REMOVE STATIC WIRE PREVIOUSLY ROUTED ALONG THE GROUND SURFACE FROM STRUCTURE 211-28 TO STRUCTURE 211-32.
3. RE-INSTALL PREVIOUSLY REMOVED TRACK 1 INSULATED FEEDER WIRE TERMINATION ASSEMBLY. CUT BARE FEEDER WIRE AND TERMINATE AT THE PROPOSED HEIGHT SHOWN. INSTALL INSULATED FEEDER CABLE WITH SUPPORTING MESSENGER BETWEEN STRUCTURE 211-27 AND STRUCTURE 211-31. REMOVE LONG FEEDER BRACKET.
4. RE-INSTALL PREVIOUSLY REMOVED TRACK 2 INSULATED FEEDER WIRE TERMINATION ASSEMBLY. CUT BARE FEEDER WIRE AND TERMINATE AT THE PROPOSED HEIGHT SHOWN. INSTALL INSULATED FEEDER CABLE WITH SUPPORTING MESSENGER BETWEEN STRUCTURE 211-28 AND STRUCTURE 211-32. REMOVE LONG FEEDER BRACKET.

DESCRIPTION	BILL OF MATERIALS			
	TRACK No.1	QTY.	TRACK No.2	QTY.
COLUMN/POLE	B7663-D44	1	B7663-D42	1
STRUCTURE FOOTING	B9203-13	1	B9203-13	1
ANCHOR FOOTING	B9207-17	1	B9207-17	1
BWA_AT_MPA				
ANCHOR TYPE				
STRUCTURE/BEAM				
SUPPORT				
CANTILEVER	B0305-01	1	B0306-03	1
CANTILEVER	B0302-01	1	B0302-03	1
CANTILEVER				
REGISTRATION	B3309-02	1	B3310-12	1
REGISTRATION	B3301-12	1	B3302-12	1
REGISTRATION				
FITTING	B0351-06	1	B0351-06	1
FITTING				
FITTING				
STATIC WIRE SUPPORT	B1301-03	1	B1301-03	1
STATIC WIRE SPLICE	**C0432-01**	**1**	**C0432-01**	**1**
FEEDER WIRE TYPE				
FEEDER WIRE SUPPORT	B2304-02	1	B2304-02	1
JUMPER				
HANGER SET	C1303-01	1	C1303-01	1
HANGER SET	C1300-09	1	C1300-09	1
HANGER SET	C1300-09	1	C1300-09	1
BONDING	C8311-01	1	C8311-01	1
BONDING				
SUPPORT/DROP PIPE	CSA-1	1	CSA-1	1
SUPPORT/DROP PIPE				
SWITCHING ASSEMBLY				
AUXILIARY POWER SUPPLY				
INTERLOCK LIGHTING				
ID NUMBER PLATE	S0301-01	1	S0301-01	1
NO TRESPASSING SIGN	S0303-03	1	S0303-03	1
TRACK LOCATION MONUMENT	S0304-01	1	S0304-01	1

NON-POLLUTED	X	NON-EXPOSED	X
POLLUTED		EXPOSED	

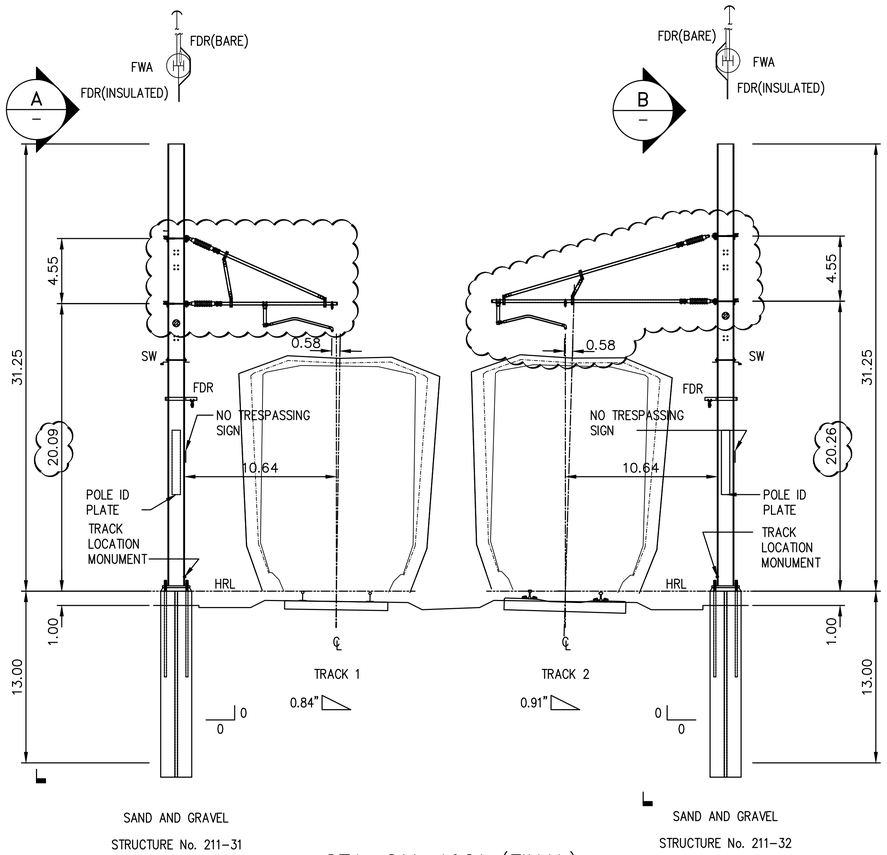

STA. 211+1921 (FINAL)
(LOOKING TOWARDS BOSTON)

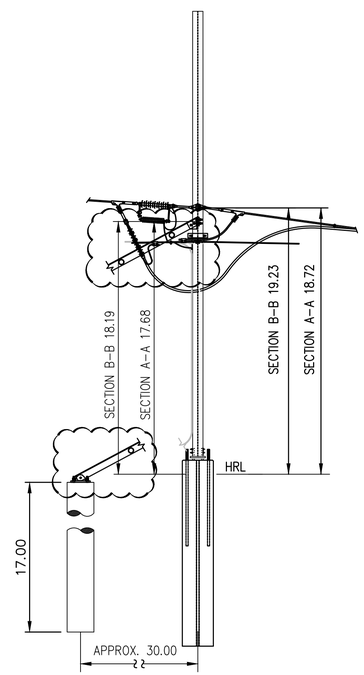

SECTION A-A
SECTION B-B

0'-0" 5'-0" 10'-0" 15'-0"
SCALE: 1" = 5'-0"

100% SUBMISSION

SED211_1921 (FINAL).DWG Plotted on Nov-20 3:35 PM

SHARON
MASKWONICUT STREET BRIDGE
OVER MBTA/AMTRAK RAILROAD

STATE	FED. AID PROJ. NO.	SHEET NO.	TOTAL SHEETS
MASS.	-	68	86
PROJECT FILE NO.		-	

STRUCTURE ERECTION DIAGRAM 211-33 & 34 (FINAL)

CANTILEVER PIPE LENGTHS					
ITEM	LOCATION	VARIABLE LENGTH			
		HP (HORIZONTAL PIPE)	DP (DIAGONAL PIPE)	BP (BRACE PIPE)	VP (VERTICAL PIPE)
B0301-04	TRACK 1	11'-0 5/8"	9'-8 5/8"	—	—
B3305-02	TRACK 1	10'-5 1/4"	2'-7 1/2"	—	0'-10 3/4"
B0301-04	TRACK 2	7'-7 7/8"	6'-10 3/8"	—	—
B3304-02	TRACK 2	—	—	—	0'-6 3/4"

NOTE: SEE ASSOCIATED AMTRAK BASIC DESIGN DRAWINGS FOR PIPE LENGTH VARIABLE DESIGNATIONS

DESCRIPTION	TRACK No.1	TRACK No.2
CONTACT WIRE HEIGHT	**18.17**	**18.33**
MESSENGER HEIGHT	**20.47**	**20.83**
SYSTEM HEIGHT	**2.30**	**2.50**
STATIC WIRE HEIGHT	**22.38**	**22.38**
FEEDER WIRE HEIGHT	25.37	25.71
SPAN AHEAD	95	95

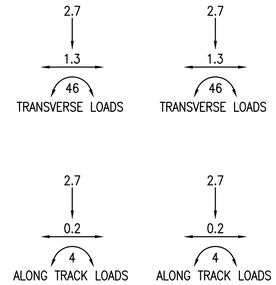

NOTES:

1. STRUCTURE LOADINGS INDICATE THE MAXIMUM DESIGN VALUE FOR THE LONGITUDINAL AND TRANSVERSE DESIGN DIRECTIONS.
2. ALL MOMENTS AND FORCES ARE LOCATED AT THE BASE OF THE POLE, FORCE IS IN KIPS, MOMENT IS IN FT.-KIPS.
3. DIMENSIONS ARE IN FEET EXCEPT SUPERELEVATION WHICH IS IN INCHES AS INDICATED.
4. DEPICTED WORK OCCURS DURING THE TEMPORARY STAGE BUT WILL REMAIN AS A FINAL CONDITION. CANTILEVERS TO BE REPLACED FROM THE PIN CONNECTION, WITH THE EXISTING ASSOCIATED FITTINGS TO REMAIN.

STATEMENT OF WORK:

1. REPLACE TRACK 1 CANTILEVER AND REGISTRATION ARMS TO OBTAIN THE DEPICTED STAGGER. ADJUST HEIGHT OF EXISTING CANTILEVER FITTING AS REQUIRED.
2. RE-PROFILE TRACK 1 OCS IN THE ADJACENT SPANS.
3. REPLACE TRACK 2 CANTILEVER AND REGISTRATION ARMS TO OBTAIN THE DEPICTED STAGGER. ADJUST HEIGHT OF EXISTING CANTILEVER FITTING AS REQUIRED.
4. RE-PROFILE TRACK 2 OCS IN THE ADJACENT SPANS.

DESCRIPTION	BILL OF MATERIALS			
	TRACK No.1	QTY.	TRACK No.2	QTY.
COLUMN/POLE	B7639-31	1	B7639-31	1
STRUCTURE FOOTING	B9201-12	1	B9201-12	1
ANCHOR FOOTING				
BWA_AT_MPA				
ANCHOR TYPE				
STRUCTURE/BEAM				
SUPPORT				
CANTILEVER	B0301-04	1	B0301-04	1
CANTILEVER	**B0301-04**	**1**	**B0301-04**	**1**
CANTILEVER				
REGISTRATION	B3305-02	1	B3304-02	1
REGISTRATION	**B3305-02**	**1**	**B3304-02**	**1**
REGISTRATION				
FITTING	B0351-10	1	B0351-10	1
FITTING				
FITTING				
STATIC WIRE SUPPORT	B1304-01	1	B1304-01	1
FEEDER WIRE TYPE				
FEEDER WIRE SUPPORT	B2301-09	1	B2301-09	1
JUMPER				
HANGER SET	C1300-08	1	C1300-08	1
HANGER SET	**C1300-08**	**1**	**C1300-08**	**1**
HANGER SET				
BONDING				
BONDING				
SUPPORT/DROP PIPE				
SUPPORT/DROP PIPE				
SWITCHING ASSEMBLY				
AUXILIARY POWER SUPPLY				
INTERLOCK LIGHTING				
ID NUMBER PLATE	S0301-01	1	S0301-01	1
NO TRESPASSING SIGN	S0303-03	1	S0303-03	1
TRACK LOCATION MONUMENT	S0304-01	1	S0304-01	1

NON-POLLUTED	X	NON-EXPOSED	X
POLLUTED		EXPOSED	

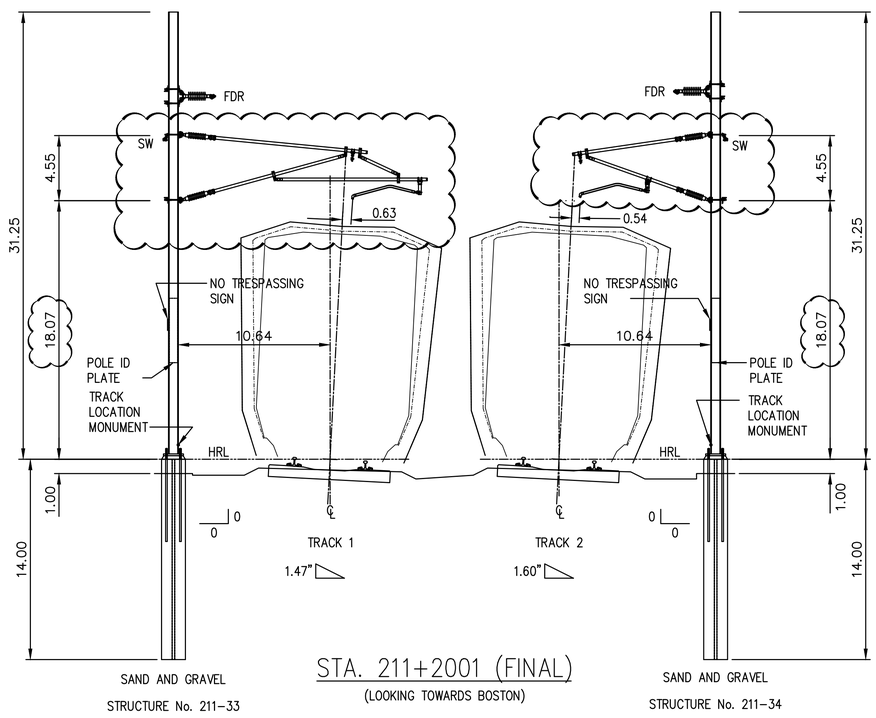

STA. 211+2001 (FINAL)
(LOOKING TOWARDS BOSTON)

0'-0" 5'-0" 10'-0" 15'-0"
SCALE: 1" = 5'-0"

100% SUBMISSION

SED211_2001 TEMP.DWG Plotted on Nov-20 3:35 PM

SHARON
MASKWONICUT STREET BRIDGE
OVER MBTA/AMTRAK RAILROAD

STATE	FED. AID PROJ. NO.	SHEET NO.	TOTAL SHEETS
MASS.	-	69	86
PROJECT FILE NO.		-	

FIXED BRIDGE LAYOUT - MASKWONICUT (1 OF 2)

NOTES:

1. ALL OCS WIRES TO BE FREE-RUNNING UNDER THE BRIDGE IN FINAL CONDITION.

DECK TYPE: STEEL

PROPOSED MINIMUM BRIDGE DECK CLEARANCE ABOVE IHRL:

TRACK 1 BOTH FACES: 20.08 FT.
TRACK 2 BOTH FACES: 20.87 FT.

SPEED: 140 MPH

CURVE: 0.90°

PROPOSED SUPERELEVATION:
TRACK 1: 0.33 IN.
TRACK 2: 0.36 IN.

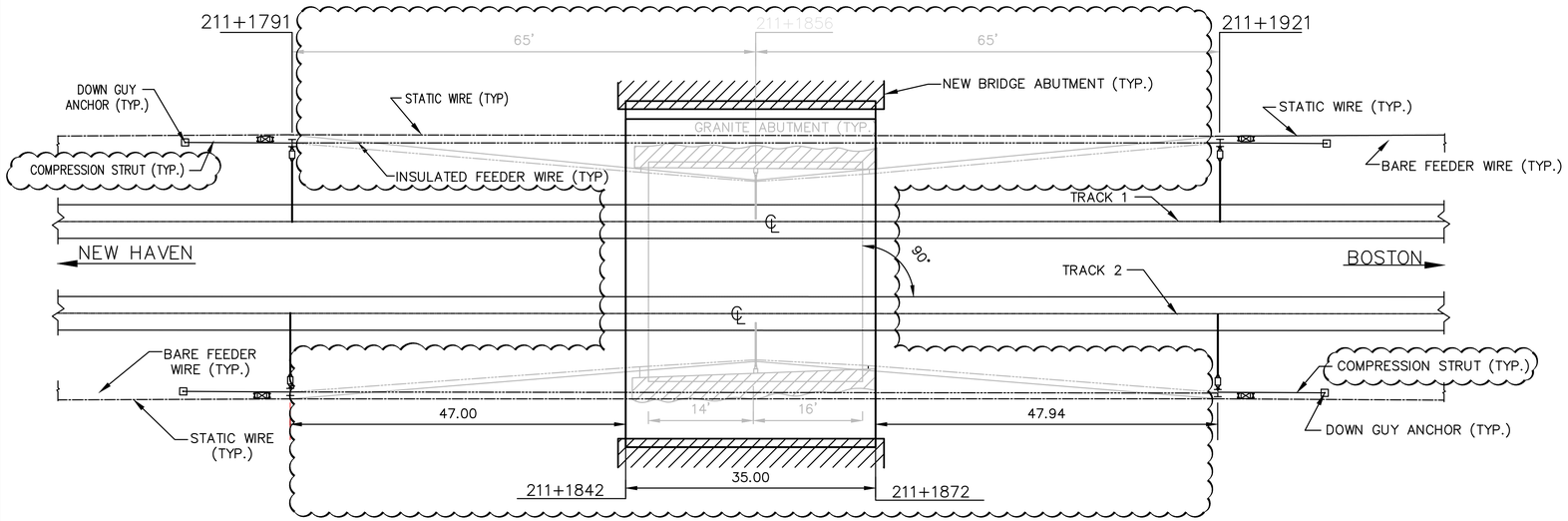

PLAN VIEW
SCALE 1"= 20'

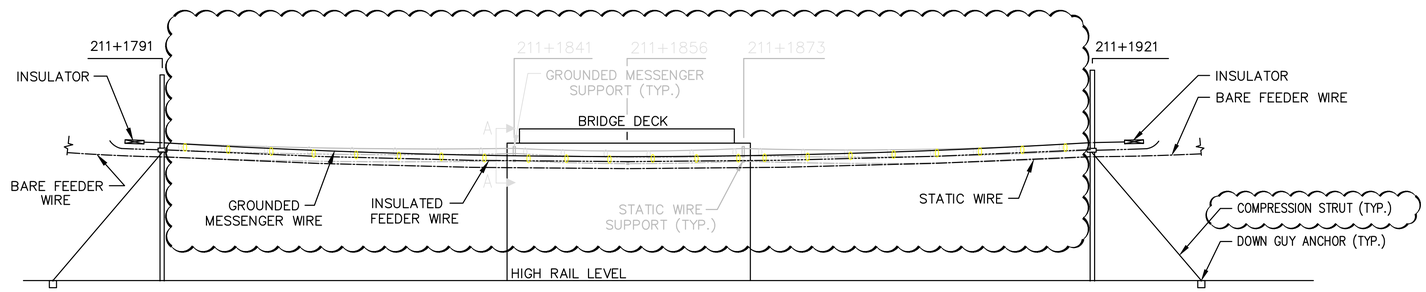

VIEW INTO ABUTMENT (SIMILAR OPPOSITE SIDE)
SCALE: 1"= 20'

BILL OF MATERIALS

DESCRIPTION	TRACK No. 1	QTY	TRACK No. 2	QTY
POLE NUMBER	211-29		211-30	
LOCATION ML + FT	211+1856		211+1856	
OFFSET	6.11		6.80	
POLE				
POLE FOOTING				
ANCHOR FOOTING				
BWA-AT-MPA				
ANCHOR TYPE				
STRUCTURE/BEAM				
SUPPORT				
CANTILEVER	C2325 01	1	C2325 01	1
CANTILEVER				
CANTILEVER				
REGISTRATION	C2301 02	1	C2301 02	1
REGISTRATION				
REGISTRATION				
FITTING				
FITTING				
FITTING				
STATIC WIRE HT.	16.12		16.52	
STATIC WIRE SUPPORT	B1302 01	1	B1302 01	1
FEEDER WIRE HT.	17.20		17.60	
FEEDER WIRE TYPE				
FEEDER WIRE SUPPORT	B2306 02	1	B2306 02	1
JUMPER				
HANGER SET				
HANGER SET				
HANGER SET				
BONDING				
BONDING				
TRACK LOC. MON.	S0304 03	1	S0304 03	1
ID. NUMBER PLATE				
DANGER LIVE WIRE SIGNS				
NO TRESPASSING SIGN				

STATIC WIRE AND FEEDER SUPPORTS

DESCRIPTION	TRACK No. 1	QTY	TRACK No. 1	QTY	TRACK No. 2	QTY	TRACK No. 2	QTY
LOCATION ML + FT	211+1841		211+1873		211+1841		211+1873	
CANTILEVER								
STATIC WIRE HEIGHT	16.12		16.12		16.52		16.52	
STATIC WIRE SUPPORT	B1306 01	1	B1306 01	1	B1306 01	1	B1306 01	1
FEEDER HT.	17.20		17.20		17.60		17.60	
FEEDER TYPE								
FEEDER SUPPORT	B2306 01	1	B2306 01	1	B2306 01	1	B2306 01	1

NOTES:
1. ABUTMENT STONEWORK TO BE DRESSED AS REQUIRED TO ACCOMMODATE PROPOSED ATTACHMENT.

MASSACHUSETTS BRIDGE No. S-9-3 (MA. 211.62) SHT. 1 OF 2

100% SUBMISSION

F2111856.DWG Plotted on Nov-20 3:36 PM

NOTES:

1. ALL OCS WIRES TO BE FREE-RUNNING UNDER THE BRIDGE IN FINAL CONDITION.

SHARON
MASKWONICUT STREET BRIDGE
OVER MBTA/AMTRAK RAILROAD

STATE	FED. AID PROJ. NO.	SHEET NO.	TOTAL SHEETS
MASS.	-	70	86
PROJECT FILE NO.		-	

FIXED BRIDGE LAYOUT - MASKWONICUT (2 OF 2)

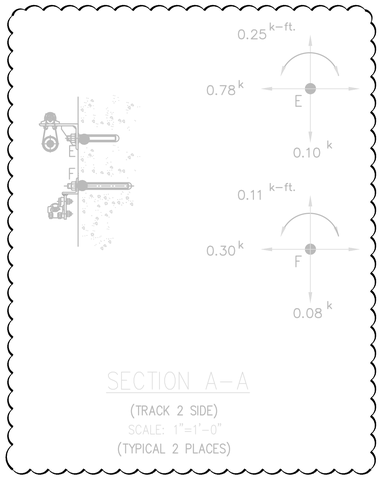

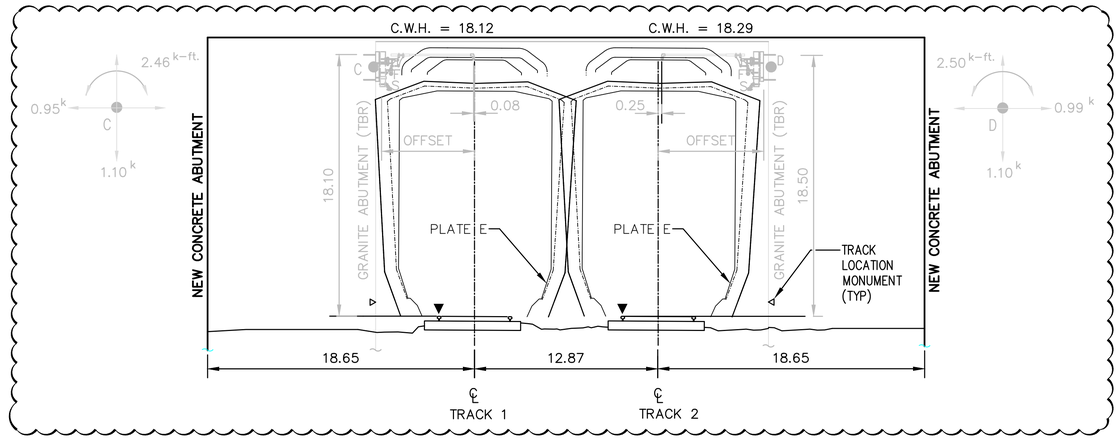

STA. 211+1856
BRIDGE CROSS SECTION – FACING BOSTON
SCALE 1"= 10'

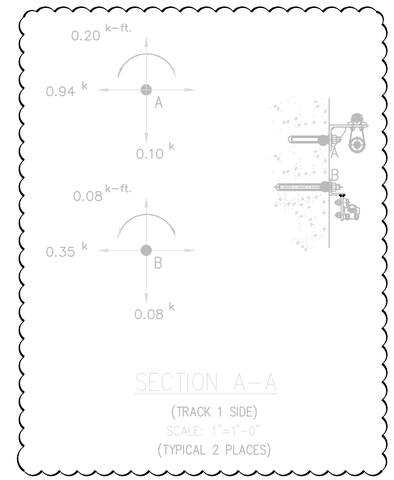

MASSACHUSETTS BRIDGE No. S-9-3 (MA. 211.62) SHT. 2 OF 2

100% SUBMISSION

F211185 6A.DWG Plotted on Nov-20 3:36 PM

SHARON
MASKWONICUT STREET BRIDGE
OVER MBTA/AMTRAK RAILROAD

STATE	FED. AID PROJ. NO.	SHEET NO.	TOTAL SHEETS
MASS.	-	71	86
PROJECT FILE NO.		-	

BONDING AND GROUNDING - MASKWONICUT ST OHB

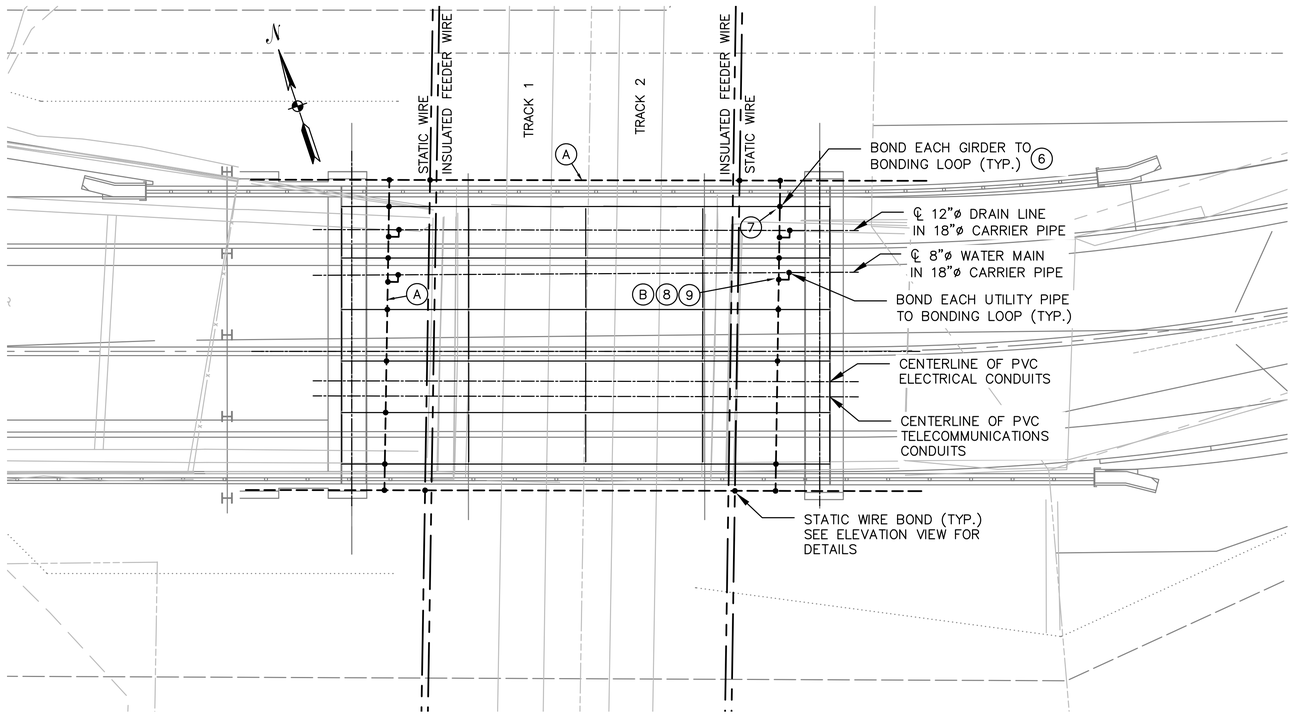

PLAN VIEW
SCALE 1"= 10'

STEEL BRIDGE, CONCRETE DECK				
BILL OF MATERIAL				
ITEM NO.	QTY.	UNIT	DESCRIPTION	CATALOG No.
A	250	FT	CABLE 4/0 AWG Al, COVERED	9704FET
B	A/R	FT	CABLE 4/0 AWG Cu	9305FET
1	–	EA	BONDING LOOP – STEEL BRIDGE – NO HARDWARE	C8302 02
2	A/R	EA	JUMPER – CABLE CLAMP TO 2 HOLE NEMA TERM., WITH BOLTS, NUTS, FLAT & LOCK WASHERS 1/2"–13 x 2" SS	C8305 01
3	6	EA	JUMPER – CABLE CLAMP TO CABLE CLAMP	C8305 04
4	4	EA	JUMPER – CABLE CLAMP TO BARE (Cu CABLE) TO PIPE CLAMP	C8306 04
5	A/R	EA	CABLE CLIP, COMPLETE – FOR CONCRETE, ANCHOR DEPTH 1 9/16"	C8314 02
6	A/R	EA	CABLE CLIP, COMPLETE – FOR STEEL SECTION , MAX. THICKNESS 1"	C8314 04
7	A/R	EA	CADWELD, FLAT, CABLE DOWN, TYPE VB, MOLD VBC–2Q	C8521 01
8	A/R	EA	PARALLEL CLAMP, ANY COMBINATION OF 4/0 Al AND Cu CABLES	C9402 04
9	4	EA	PIPE CLAMP, 18" DIAM. IPS (Cu CABLE)	C8402 03
10	A/R	EA	SERVIT POST, COPPER CABLE TO STEELWORK	C8426 01
11	6	EA	DANGER LIVE WIRE SIGN, COMPLETE FOR BRIDGE BARRIER (LEXAN)	S0305 02

NOTES:

1. SEE SHEETS 48 THROUGH 50 FOR OCS GENERAL NOTES, ABBREVIATIONS, AND LEGEND, RESPECTIVELY.
2. CONTRACTOR SHALL PROVIDE TEMPORARY PROTECTION SHIELDS AND BARRIERS AS REQUIRED IN ACCORDANCE WITH AMTRAK STANDARD DRAWING ET–1447–D.
3. BONDING LOOP WIRE TO RUN DOWN SIDE OF BRIDGE, KEEPING CLEARANCE FROM FEEDER WIRE, TO MAKE STATIC WIRE CONNECTION.
4. CONTRACTOR WILL BE RESPONSIBLE FOR THE SUPPLY OF ALL GROUNDING MATERIAL. CONTRACTOR WILL BE RESPONSIBLE FOR THE INSTALLATION OF ALL GROUNDING AND BONDING MATERIALS, WITH THE EXCEPTION OF FINAL TIE–IN TO THE STATIC WIRES.
5. ALL QUANTITIES SHOWN IN THE BILL OF MATERIAL ARE ESTIMATES ONLY. CONTRACTOR IS RESPONSIBLE FOR VERIFYING QUANTITIES OF ALL BONDING AND GROUNDING MATERIALS.
6. DRAWING DEPICTS FINAL GROUNDING AND BONDING ARRANGEMENT OF THE PROPOSED STRUCTURE. BONDING OF EACH INDIVIDUAL BRIDGE GIRDER TO THE GROUNDING SYSTEM IS REQUIRED IMMEDIATELY AFTER GIRDER INSTALLATION.
7. REFERENCE NUMBERS SHOWN CORRESPOND TO DRAWING NUMBERS OF AMTRAK'S NORTHEND ELECTRIFICATION PROJECT BASIC DESIGN.
8. REFER TO SHEET 72 FOR BONDING AND GROUNDING DETAILS.

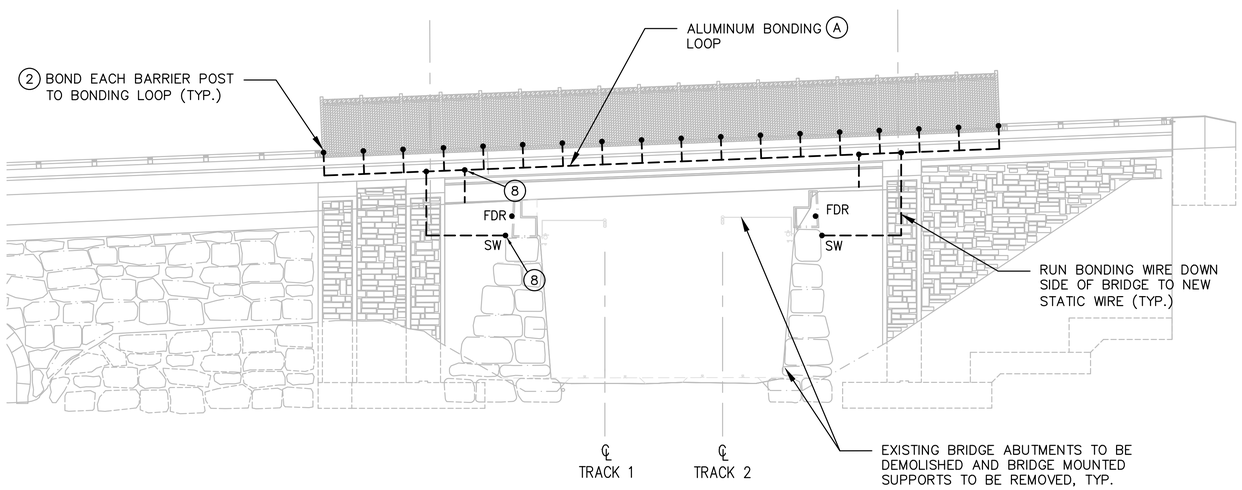

ELEVATION VIEW
SCALE 1"= 10'

MASSACHUSETTS BRIDGE No. S–9–3 (MP 211.62)
STA. 211+1856 (UN 16)

100% SUBMISSION

G2111856.DWG Plotted on Nov-20 3:38 PM

SHARON
MASKWONICUT STREET BRIDGE
OVER MBTA/AMTRAK RAILROAD

STATE	FED. AID PROJ. NO.	SHEET NO.	TOTAL SHEETS
MASS.	-	72	86
PROJECT FILE NO.		-	

BONDING AND GROUNDING DETAILS

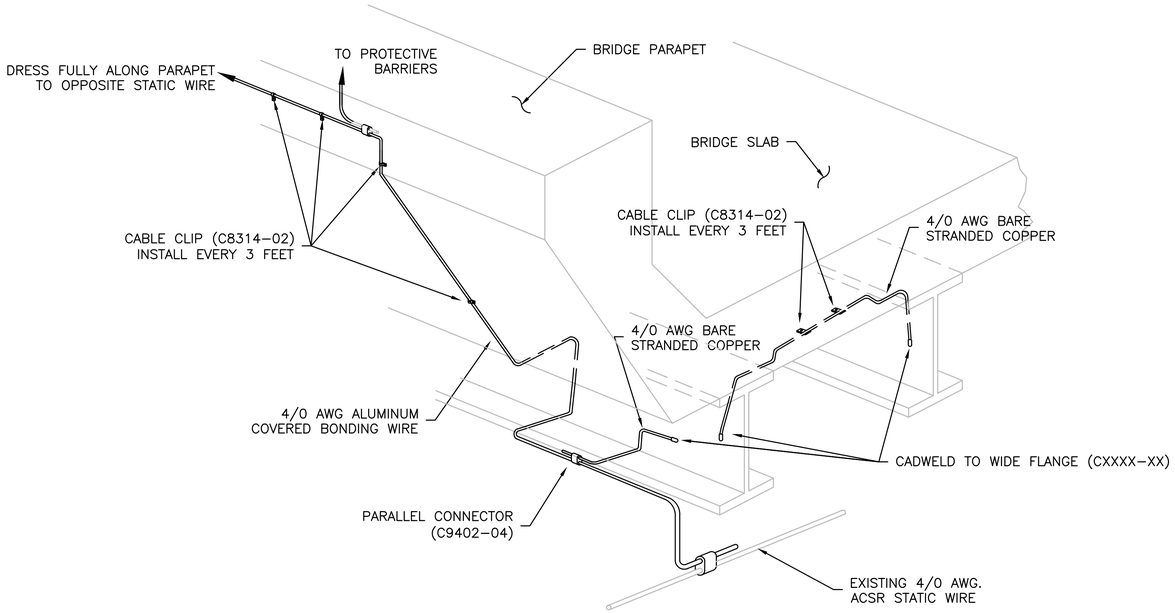

PARAPET BONDING (STEEL BRIDGE)
GIRDER TO GIRDER
SCALE: NOT TO SCALE

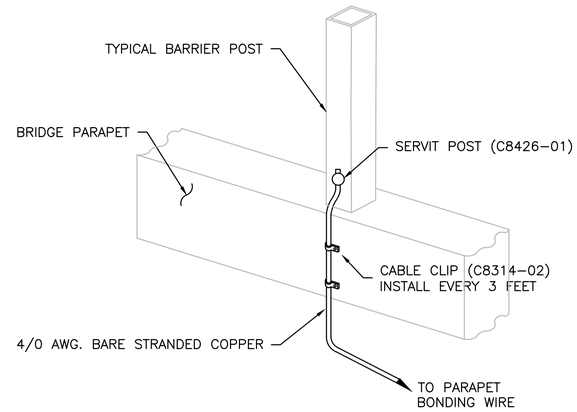

BONDING WIRE TO PROTECTIVE BARRIER
NOT TO SCALE

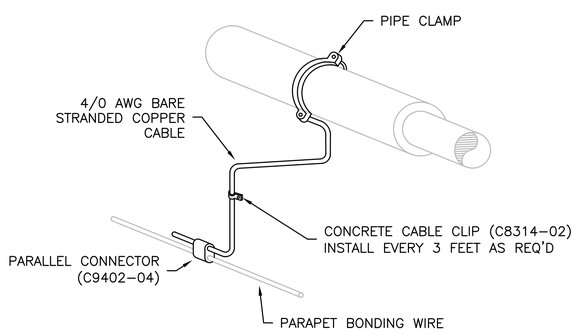

STATIC WIRE TO UTILITY PIPE
SCALE: 1 1/2" = 1'

100% SUBMISSION

60020ETBG01.DWG Plotted on Nov-20 3:39 PM

BILL OF MATERIALS (CSA-1)

ITEM NUMBER		1	2	3	4	5	6	7	8	9	10	11	12
MARK	DESCRIPTION	ST	ST	12730	22742	32741	FP	WT9X	FP	12030	22041	32041	FP
		L	R	V2	00	10	01	23	02	M2	00	10	03
CSA-1	FOR W14X90	1	1	9	18	18	8	1	2	2	4	4	2

*SEE SHEET 74 FOR ST-L, ST-R, FP-03, AND WTX23 DETAILS.

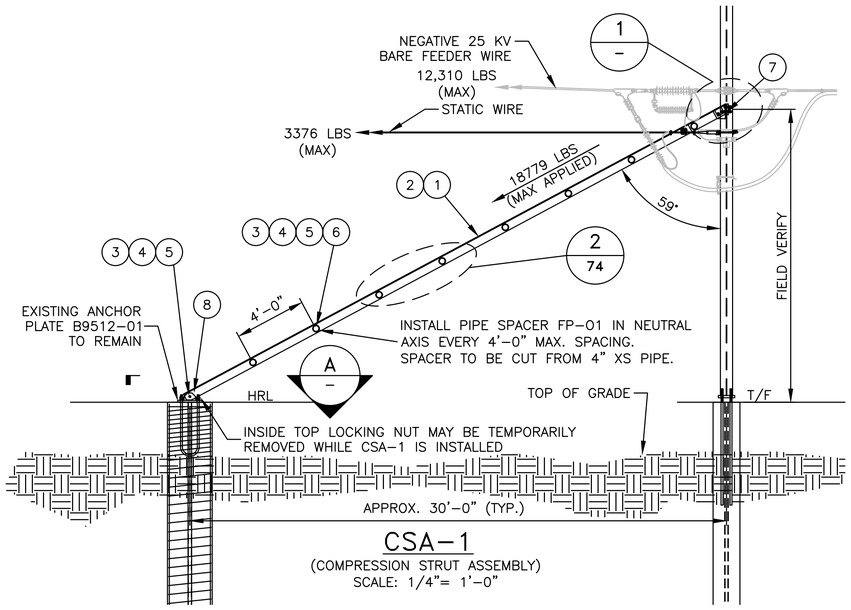

CSA-1
(COMPRESSION STRUT ASSEMBLY)
SCALE: 1/4"= 1'-0"

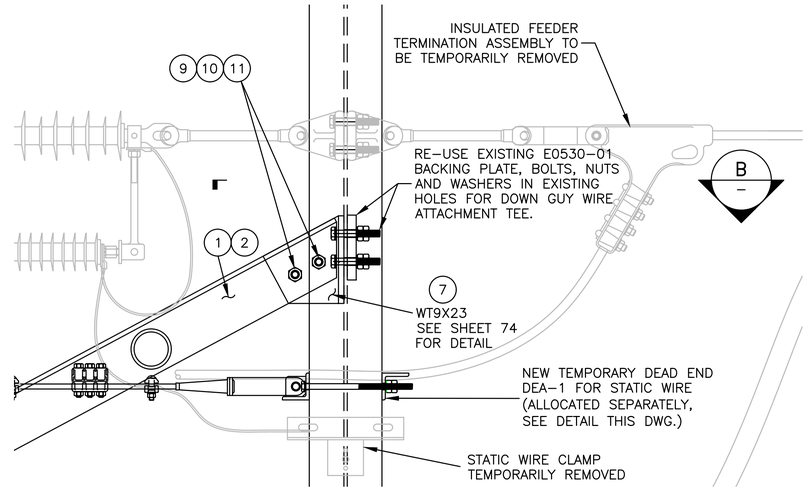

DETAIL 1
SCALE: 1 ½"=1'-0"

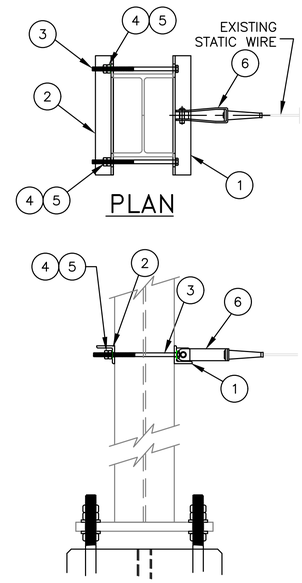

DEA-1 & DEA-2
(DEAD END ASSEMBLY)
SCALE: 1" = 1'-0"

BILL OF MATERIALS (DEA-1 & 2)

ITEM NUMBER		1		2		3		4	5	6
MARK	DESCRIPTION	E05341	E05340	E05361	E05360	11630	11630	21642	31641	C0425
		01	03	01	03	22	72	00	30	03
DEA-1	FOR W8X40, W8X48	1	0	1	0	2	0	4	4	1
DEA-2	FOR W14X90	0	1	0	1	0	2	4	4	1

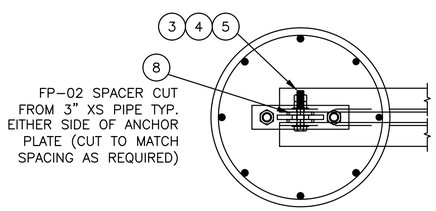

A SECTION
SCALE: 1"=1'-0"

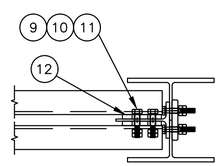

B SECTION
SCALE: 1"=1'-0"

(STATIC WIRE NOT SHOWN FOR CLARITY)

NOTES:

1. FOR LOCATION OF PROPOSED CSA-1 AND DEA-1 ASSEMBLIES SEE WIRING LAYOUTS.
2. SEE SHEETS 48, 49, AND 50 FOR GENERAL NOTES, ABBREVIATIONS, AND LEGEND.

GRAPHIC SCALES:

0'-0" 4'-0" 8'-0" 12'-0"
SCALE: 1/4" = 1'-0"

0'-0" 1'-0" 2'-0" 3'-0"
SCALE: 1" = 1'-0"

0'-0" 0'-8" 1'-4" 2'-0"
SCALE: 1-1/2" = 1'-0"

100% SUBMISSION

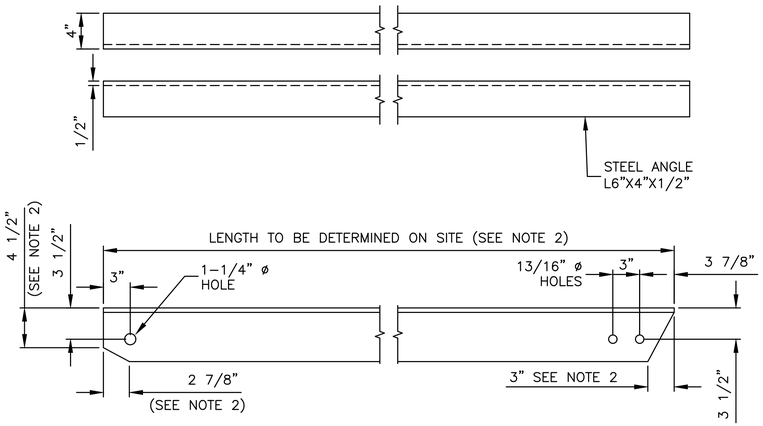

ST-"L" (ST-R)

("L" AND "R" DESIGNATE RIGHT OR LEFT HAND SIDE STRUT)
LOCATIONS OF HOLES FOR STIFFENERS NOT SHOWN, SEE
DETAIL 2 THIS SHEET
SCALE: 1 ½" = 1'-0"

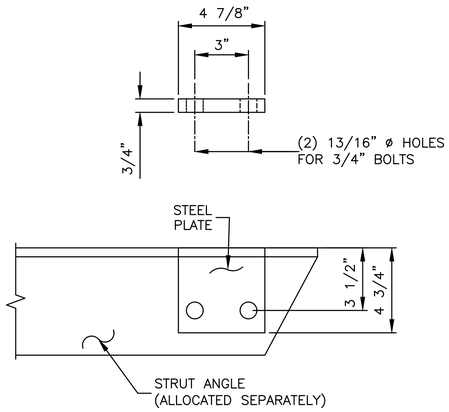

FP-03

SCALE: 3"=1'-0"

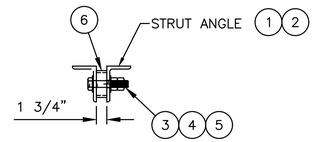

C VIEW

SCALE: 1"=1'-0"

ITEM NUMBERS CORRESPOND TO
CSA-1 BILL OF MATERIALS, SHEET 73

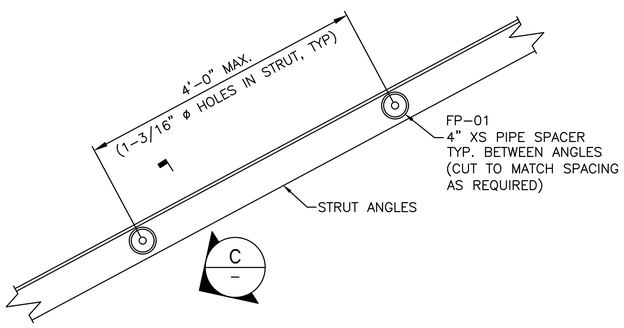

2 DETAIL
73

SCALE: 1"=1'-0"

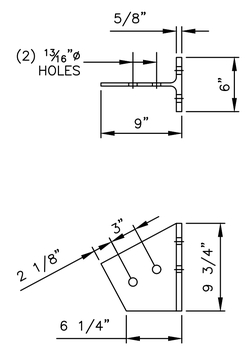

WT9X23

SCALE: 1 ½" = 1'-0"

NOTES:

1. FOR GENERAL NOTES, ABBREVIATIONS, AND LEGEND, SEE DRAWINGS 48, 49, AND 50, RESPECTIVELY.
3. DIMENSIONS OF COMPRESSION STRUT, ST-L (AND ST-R), ARE APPROXIMATE ONLY. ACTUAL FIELD DIMENSIONS TO BE VERIFIED BEFORE FABRICATION OF EACH COMPRESSION STRUT ANGLE.

GRAPHIC SCALES:

0'-0" 1'-0" 2'-0" 3'-0"
SCALE: 1" = 1'-0"

0'-0" 0'-8" 1'-4" 2'-0"
SCALE: 1-1/2" = 1'-0"

0'-0" 0'-4" 0'-8" 1'-0"
SCALE: 3" = 1'-0"

100% SUBMISSION

SHARON
MASKWONICUT STREET BRIDGE
OVER MBTA/AMTRAK RAILROAD

STATE	FED. AID PROJ. NO.	SHEET NO.	TOTAL SHEETS
MASS.	-	75	86
PROJECT FILE NO.		-	

RETURN PLAN

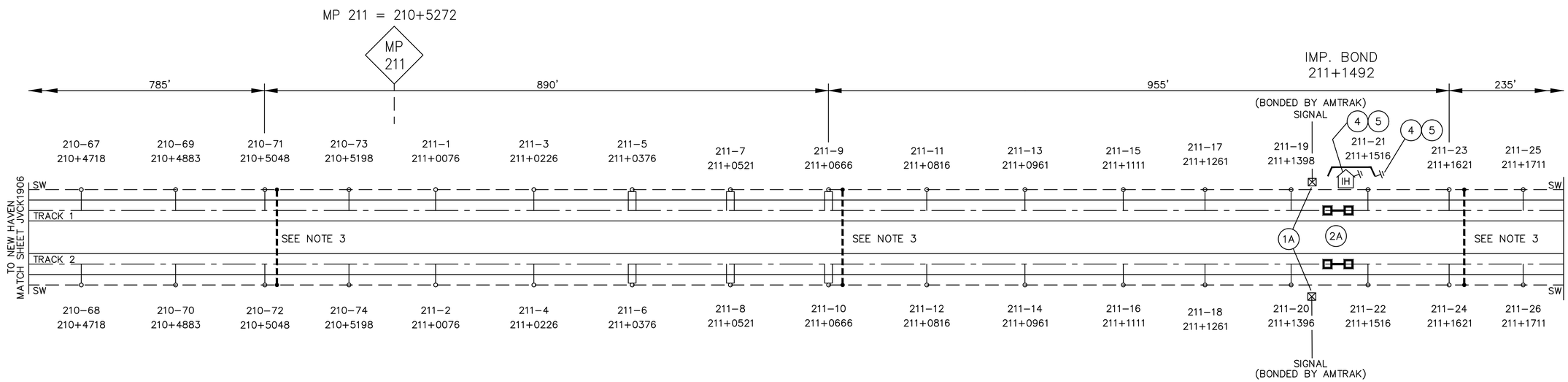

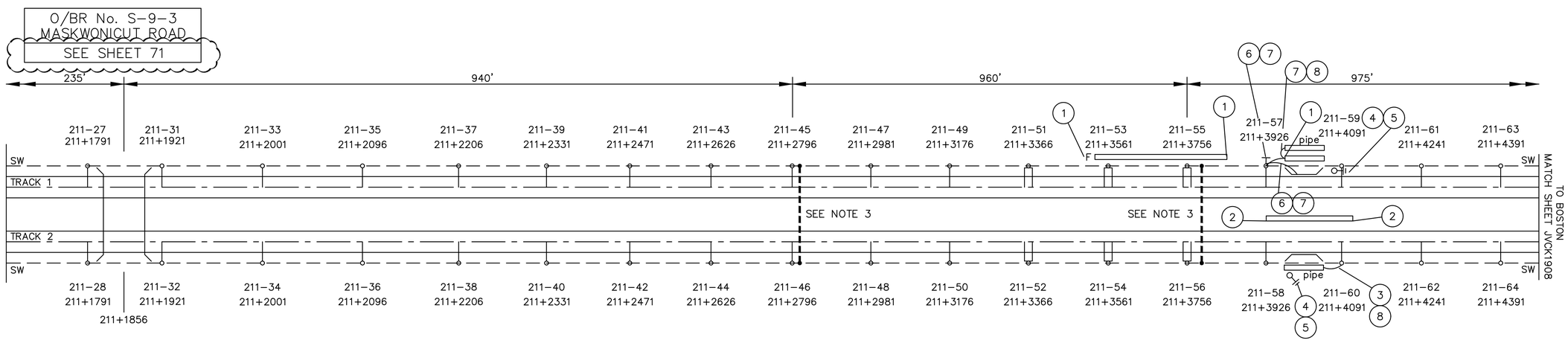

STA. No. 210+4718
BBC–MEC SUPPLY

ITEM#	COMPONENT	QTY
1	C8313–01	2
2	C8313–08	2
3	C8304–08	2
4	C8304–05	4
5	9305F–ET	60'
6	C8521–01	2
7	C8521–04	2
8	C8424–04	2

AMTRAK SUPPLY

ITEM#	DWG/STYLE #	QTY
1A	SIGN–AL	2
2A	GGR52–02	1

BONDING AND GROUNDING RETURN SYSTEM
MP 210+4638 TO MP 211+4466 (UN 16)

NOTES:

1/ EFFECTIVE SW TO SW CONNECTIONS EXIST AT:
- A–BOND LOCATIONS
- PORTALS
- OVERHEAD BRIDGES

2/ READ IN CONJUNCTION WITH CONSTRUCTION SPECIFICATIONS VOLUME 29, SECTION 16392, AND JVPGGR DRAWING SERIES.

3/ ALLOCATIONS FOR SW–SW CONNECTION FOUND ON SED.

100% SUBMISSION

JVCK1907.DWG Plotted on Nov-20 3:43 PM

SHARON
MASKWONICUT STREET BRIDGE
OVER MBTA/AMTRAK RAILROAD

STATE	FED. AID PROJ. NO.	SHEET NO.	TOTAL SHEETS
MASS.	-	76	86
PROJECT FILE NO.		-	

STRUCTURE LAYOUT PLAN

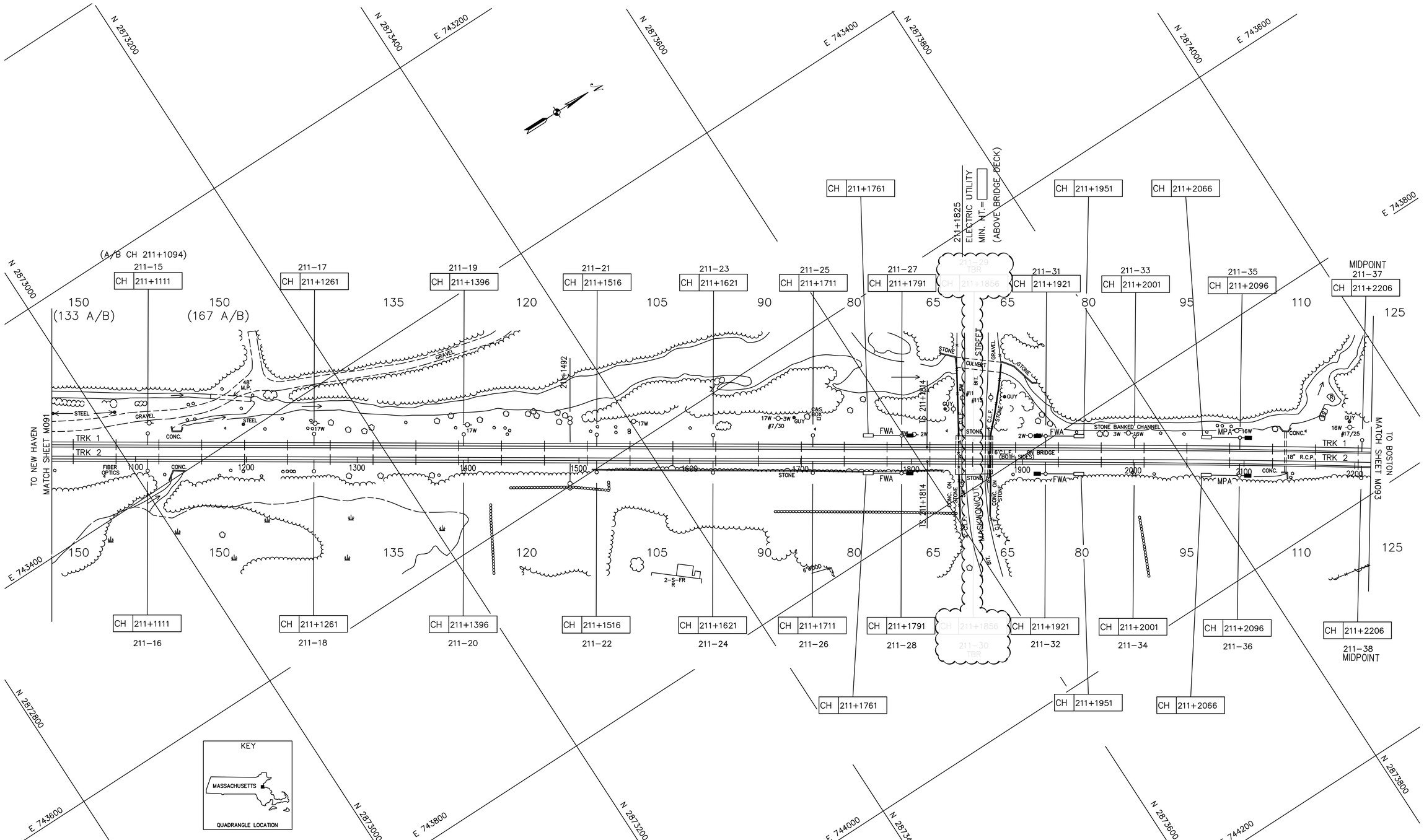

STRUCTURE LAYOUT PLAN
FROM 211+1023 TO 211+2215

100% SUBMISSION

JVCPM092.DWG Plotted on Nov-20 3:43 PM

OCS MASTER BILL OF MATERIAL

Mark	Amtrak #	Ref. Dwg	Description	Manufacturer	Unit	Quantity
11630-22	- -	JVCD0101_1	5/8" BOLT, HH STEEL GALV., 12" LG, 6" THD	MCMASTER-CARR NEW BRUNSWICK, NJ	EA	28
11630-42	- -	JVCD0101_1	5/8" BOLT, HH STEEL GALV., 14" LG, 7" THD	NEFCO, EAST HARTFORD, CT	EA	24
11630-72	- -	JVCD0101_1	5/8" BOLT, HH STEEL GALV., 17" LG, 8 1/2" THD	MCMASTER-CARR NEW BRUNSWICK, NJ	EA	4
11630-G1	- -	JVCD0101_1	5/8" BOLT, HH STEEL GALV., 2-3/4" LG, 1-3/4" THD	NEFCO, EAST HARTFORD, CT	EA	72
11630-G4	- -	JVCD0101_1	5/8" BOLT, HH STEEL GALV., 2-3/4" LG, 2-1/4" THD	NEFCO, EAST HARTFORD, CT	EA	4
11630-H4	- -	JVCD0101_1	5/8" BOLT, HH STEEL GALV., 3" LG, 2-1/4" THD	NEFCO, EAST HARTFORD, CT	EA	64
11630-M2	- -	JVCD0101_1	5/8" BOLT, HH STEEL GALV., 4" LG, 2" THD	NEFCO, EAST HARTFORD, CT	EA	16
12030-27	- -	JVCD0101_1	3/4" BOLT, STEEL GALV. HH, 12" LNG, 3" THD	NEFCO, EAST HARTFORD, CT	EA	8
12030-77	- -	JVCD0101_1	3/4" BOLT, HH STEEL GALV., 17" LG, 3" THD	NEFCO, EAST HARTFORD, CT	EA	8
12030-H4	- -	JVCD0101_1	3/4" BOLT, HH STEEL GALV., 3" LG, 2-1/4" THD	NEFCO, EAST HARTFORD, CT	EA	8
12030-L1	- -	JVCD0101_1	3/4" BOLT, STEEL GALV. HH, 3-3/4" LNG, 2" THD	NEFCO, EAST HARTFORD, CT	EA	16
12030-R2	- -	JVCD0101_1	3/4" BOLT, STEEL GALV. HH, 5" LNG, 2 1/2" THD	MCMASTER-CARR NEW BRUNSWICK, NJ	EA	16
12730-V2	- -	JVCD0101_1	1 1/8" DIA. BOLT, STEEL GALV. 6" LNG, HALF THREAD	MCMASTER-CARR NEW BRUNSWICK, NJ	EA	4
21641-00	- -	JVCD0101_2	5/8-11 UNC GALV., A563 HEX HEAD NUT	NEFCO, EAST HARTFORD, CT	EA	336
21642-00	- -	JVCD0101_2	5/8-11 UNC GALV., A563 HEX HEAD NUT	MCMASTER-CARR NEW BRUNSWICK, NJ	EA	24
22041-00	- -	JVCD0101_2	3/4" NUT, STEEL GALV, HEX	MCMASTER-CARR NEW BRUNSWICK, NJ	EA	32
22042-00	- -	JVCD0101_2	3/4" NUT, STEEL GALV, HEAVY HEX	NEFCO, EAST HARTFORD, CT	EA	80
22742-00	- -	JVCD0101_2	1 1/8" DIA. HH NUT, STEEL GALV., 7 UNC	MCMASTER-CARR NEW BRUNSWICK, NJ	EA	8
31641-10	- -	JVCD0101_3	5/8" WASHER, HARDENED STEEL, GALV., PLAIN FLAT TYPE A	NEFCO, EAST HARTFORD, CT	EA	56
31641-11	- -	JVCD0101_3	5/8" WASHER, HARDENED STEEL, GALV., PLAIN FLAT TYPE B	NEFCO, EAST HARTFORD, CT	EA	120
31641-30	- -	JVCD0101_3	5/8" WASHER, HARDENED STEEL, GALV., PLAIN FLAT TYPE A	MCMASTER-CARR NEW BRUNSWICK, NJ	EA	112
31642-00	- -	JVCD0101_3	5/8" LOCK WASHER, HARDENED STEEL, GALV.	NEFCO, EAST HARTFORD, CT	EA	64
32041-10	- -	JVCD0101_3	3/4" FLAT WASHER, HARDENED STEEL, GALV	MCMASTER-CARR NEW BRUNSWICK, NJ	EA	56
32041-30	- -	JVCD0101_3	3/4" FLAT WASHER, HARDENED STEEL, GALV, PLAIN WASHER TYPE A	NEFCO, EAST HARTFORD, CT	EA	16
32742-00	- -	JVCD0101_3	1 1/8" WASHER, HARDENED STEEL, GALV., PLAIN FLAT TYPE A	MCMASTER-CARR NEW BRUNSWICK, NJ	EA	8
9304F-ET	- -	JVCD0101_9	HANGER WIRE, 3/16" BARE STRANDED COPPER ALLOY CAROLINA STEEL & WIRE CORP. 9304F-ET	CAROLINA STEEL & WIRE CORP GREENSBORO, NC	FT	126
9401F-ET	- -	JVCD0101_9	BARE STRANDED ASCR WIRE, STATIC WIRE/MIDPOINT WIRE	SERVICE WIRE CO. HUNTINGTON WV	FT	350
9402F-ET	- -	JVCD0101_9	BARE STRANDED ASCR WIRE, NEGATIVE FEEDER	SERVICE WIRE CO. HUNTINGTON WV	FT	350
9604F-ET	- -	JVCD0101_9	4/0 AWG COPPER WIRE, POLYETHELENE COVERED ARTHUR J. HURLEY Co. Inc. MC-005	ARTHUR J. HURLEY Co. INC. BOSTON, MA	FT	48
B0402-01	- -	JVCB0402	HINGE BRACKET, DUCTILE IRON ASTM A536, HOT DIP GALVANIZED ASTM A153 EMSPEC: PAC-110-034	EMSPEC BOIS-DES-FILION, QUEBEC	EA	16
B0403-01	44-444-20061	JVCB0403	MESSENGER WIRE SUSPENSION CLAMP	DOSSERT WATERBURY, CT	EA	4
B0406-01	44-444-20021	JVCB0406	STRUT PIPE INSULATOR, INJECTION MOLDED EPDM RUBBER SEDIVER INC.: UT210XG015	SEDIVER INC YORK, SC	EA	8
B0407-01	44-444-20023	JVCB0407	STRUT PIPE INSULATOR, INJECTION MOLDED EPDM RUBBER SEDIVER INC.: TU80XG015	SEDIVER INC YORK, SC	EA	8
B0408-01	44-444-20041	JVCB0408	CLEVIS CLAMP FOR PIPE, AL 6061-T6, WITH 2 BOLTS. EMSPEC: PAC-110-039	EMSPEC BOIS-DES-FILION, QUEBEC	EA	22
B0413-01	44-444-20083	JVCB0413	MESSENGER WIRE CLAMP, AL BRONZE ASTM B30, ALLOY 954 DOSSERT: B7925	DOSSERT WATERBURY, CT	EA	4
B0420-01	44-444-20046	JVCB0420	EYE CLAMP FOR PIPE, WITH TWO 3/8" U-BOLTS. EMSPEC: PAC-110-040	EMSPEC BOIS-DES-FILION, QUEBEC	EA	4
B0504-01	44-444-22003	JVCB0504	PIPE END CAP, LOW DENSITY POLYETHYLENE RESISTANT TO ULTRA VIOLET RADIATION CAPLUGS CCF-2-14-20	CAPLUGS BUFFALO, NY	EA	8
B0504-02	44-444-22004	JVCB0504	PIPE END CAP, LOW DENSITY POLYETHYLENE RESISTANT TO ULTRA VIOLET RADIATION CAPLUGS: W17	CAPLUGS BUFFALO, NY	EA	2
B0505-01	44-444-22007	JVCB0505	EYE FOR XS CANTILEVER PIPE, DUCTILE IRON ASTM A536, HOT DIP GALVANIZED ASTM A153 EMSPEC PAC-110-021	EMSPEC BOIS-DES-FILION, QUEBEC	EA	16
B0505-02	44-444-22008	JVCB0505	EYE FOR XXS CANTILEVER PIPE, DUCTILE IRON ASTM A536, HOT DIP GALVANIZED ASTM A153 EMSPEC: PAC-110-022	EMSPEC BOIS-DES-FILION, QUEBEC	EA	6
B2401-01	44-444-20401	JVCB2401	HORIZONTAL NEGATIVE FEEDER INSULATOR, EPDM INJECTION MOULDED RUBBER SEDIVER INC.: PK 30 XH 010 W/TSC 106 CLAMP	SEDIVER INC YORK, SC	EA	12
B2404-01	44-444-20421	JVCB2404	VERTICAL NEGATIVE FEEDER INSULATOR, TOP CLAMP ATTACHMENT. SEDIVER INC.: PKV 30 XH 010 W/TSC 106 CLAMP	SEDIVER INC YORK, SC	EA	4
B3402-01	44-444-20605	JVCB3402	STEADY ARM W/ NORMAL HOOK, 1-1/2" NOM PIPE, SCH 80 XS, 4.43 FT LG, AL ALLOY 6061-T6	DOSSERT WATERBURY, CT	EA	4
B3406-01	44-444-20641	JVCB3406_1	CONTACT WIRE SWIVEL CLAMP, AL BRONZE ASTM B30 ALLOY 954. DOSSERT: D7577	DOSSERT WATERBURY, CT	EA	8
B3408-01	44-444-20661	JVCB3408	ADJUSTABLE STEADY ARM BRACKET, AL BRONZE ASTM B30 ALLOY 954 DOSSERT B8232	DOSSERT WATERBURY, CT	EA	6
B3408-02	44-444-20662	JVCB3408	ADJUSTABLE STEADY ARM BRACKET, AL BRONZE ASTM B30 ALLOY 954 DOSSERT B8030	AFL/DOSSERT DUNCAN, SC	EA	2
B3416-01	44-444-20603	JVCB3416	STEADY ARM 4.10 FEET, 1 1/2" NOMINAL PIPE SIZE SCHEDULE 80, AL ALLOY 6061-T6.	DOSSERT WATERBURY, CT	EA	4
C0418-01	44-444-80011	JVCC0418	NEGATIVE FEEDER JUMPER WIRE CLAMP, MFG. ELEC. CONN. ALPGP 7 OR CP39A29A-3	MFG. ELEC. CONN.	EA	4
C0425-03	44-444-21084	JVCC0425	CLEVIS DEAD END, FOR STATIC WIRE, RELIABLE: GD7656-LD	RELIABLE	EA	4
C0429-01	44-444-21168	JVCC0429	STATIC WIRE AND 4/0 COPPER COUNTERPOISE WIRE CLAMP, ANDERSON: LC-53-A-XB-GP	ANDERSON LEEDS, AL	EA	4
C0432-01	44-444-21183	JVCC0432	STATIC WIRE SINGLE SLEEVE FULL TENSION, BURNDY : YDS28RL	BURNDY BETHEL, CT	EA	4
C1404-01	44-444-21226	JVCC1404	CLIP, COPPER AND LINER, BLACK NEOPRENE. DOSSERT D-7567	DOSSERT WATERBURY, CT	EA	12
C1405-01	44-444-21228	JVCC1405	HANGER END CLAMP CONTACT WIRE, AL BRONZE ASTM-B30 ALLOY 954 DOSSERT D-7582	DOSSERT WATERBURY, CT	EA	12
C1406-01	44-444-21233	JVCC1406	HANGER WIRE CLAMP, AL BRONZE ALLOY 954. DOSSERT D-7597	DOSSERT WATERBURY, CT	EA	46
C1407-01	44-444-21235	JVCC1407	HANGER CLAMP, FOR MESSENGER WIRE, AL BRONZE ASTM B30, ALLOY 954. DOSSERT D-7851	DOSSERT WATERBURY, CT	EA	46
C1503-01	44-444-22803	JVCC1503	HANGER, DEAD END, COPPER. DOSSERT: B-7981	DOSSERT WATERBURY, CT	EA	46
C1504-01	- -	JVCC1504	REDUCED HEIGHT HANGER, STAINLESS STEEL GR. 304. DOSSERT HY12-75	DOSSERT WATERBURY, CT	EA	12
C1505-01	44-444-81443	JVCC1505	LINE TAP CONNECTOR, HIGH COPPER ALLOY BURNDY KS-20	BURNDY BETHEL, CT	EA	46
C1506-01	44-444-26988	JVCC1506	STAINLESS STEEL THIMBLE, STAINLESS STEEL A151 TYPE 304 SUNCOR MARINE C1506-01	SUNCOR MARINE PEMBROKE, MA	EA	46

SHARON
MASKWONICUT STREET BRIDGE
OVER MBTA/AMTRAK RAILROAD

STATE	FED. AID PROJ. NO.	SHEET NO.	TOTAL SHEETS
MASS.	-	77	86
PROJECT FILE NO.		-	

OCS BILL OF MATERIAL

NOTES:

1. REFER TO SHEET 71 FOR BRIDGE BONDING AND GROUNDING BILL OF MATERIAL.

60020ET_BOM.DWG Plotted on Nov-20 3:43 PM

100% SUBMISSION

STEEL MASTER BILL OF MATERIAL

Mark	Amtrak #	Ref. Dwg	Description	Manufacturer	Unit	Quantity
9101F–ET	– –	JVCD0101–9	2" PIPE, STEEL GALV. SCH 80 XS	PENNFAB INC, MORRISVILLE, PA	FT	138
9102F–ET	– –	JVCD0101–9	STEEL PIPE 2" DIA. GALV, XXS	PENNFAB INC, MORRISVILLE, PA	FT	64
B2522–01	44–444–86410	JVCB2522	NEGATIVE FEEDER INSULATOR SUPPORT	PENNFAB INC, MORRISVILLE, PA	EA	4
C2503–09	44–444–86291	JVCC2503	CLIP ANGLE, STEEL BEAM ATTACHMENT, 13"x4–1/2"x3/8"	PENNFAB INC, MORRISVILLE, PA	EA	8
C2514–06	44–444–36406	JVCC2514	BACKING ANGLE, FOR W8x40 & W8x48, 3"x3"x3/8" ANGLE, 12 1/8" LENGTH	PENNFAB INC, MORRISVILLE, PA	EA	2
C2514–08	44–444–36408	JVCC2514	BACKING ANGLE, FOR W14x90, 3"x3"x8"	PENNFAB INC, MORRISVILLE, PA	EA	4
C2556–17	44–444–86681	JVCC2556	5"x3–1/2"x3/4" ANGLE FOR WALL BRACKET, 6'–4" LONG	PENNFAB INC, MORRISVILLE, PA	EA	4
C2556–18	44–444–86682	JVCC2556	5"x3–1/2"x3/4" ANGLE FOR WALL BRACKET, 6'–4" LONG	PENNFAB INC, MORRISVILLE, PA	EA	4
C2557–09	44–444–86700	JVCC2557	3"x2"x1/4" ANGLE FOR WALL BRACKET, 5'–10 1/2" LONG	PENNFAB INC, MORRISVILLE, PA	EA	8
C2558–02	44–444–86663	JVCC2558	WT6x15 STEEL COMPONENT FOR WALL BRACKET, 4'–3" LENGTH	PENNFAB INC, MORRISVILLE, PA	EA	4
C2559–01	44–444–86689	JVCC2559	GUSSET PLATE FOR WALL BRACKET, 8"x10"	PENNFAB INC, MORRISVILLE, PA	EA	4
E0501–01	44–444–23101	JVCE0501_1	5"x3–1/2"x5/8" STEEL ANGLE, WITH HOLES	PENNFAB INC, MORRISVILLE, PA	EA	12
E0501–03	44–444–23103	JVCE0501_1	5"X3–1/2"X5/8" STEEL ANGLE, WITH HOLES FOR 14" WIDE POLE	PENNFAB INC, MORRISVILLE, PA	EA	12
E0501–12	44–444–23109	JVCE0501_3	5"X3–1/2"X5/8" STEEL ANGLE, WITH HOLES	PENNFAB INC, MORRISVILLE, PA	EA	12
E0501–14	44–444–23111	JVCE0501_3	5"X3–1/2"X5/8" STEEL ANGLE, WITH HOLES FOR FEEDER INSULATOR ON A 14" WIDE POLE	PENNFAB INC, MORRISVILLE, PA	EA	12
E0503–05	44–444–23151	JVCE0503	MC 8X22.8 CHANNEL, STEEL GALV. WITH HOLES FOR INSULATOR BOLT CIRCLE	PENNFAB INC, MORRISVILLE, PA	EA	12
E0534–01	44–444–89273	JVCE0534	DEAD END ANGLES FOR STATIC WIRE TO STATIC WIRE JUMPER CONNECTION, STEEL, GALV. FOR W8 POLE	PENNFAB INC, MORRISVILLE, PA	EA	2
E0534–03	44–444–89275	JVCE0534	DEAD END ANGLES FOR STATIC WIRE TO STATIC WIRE JUMPER CONNECTION, STEEL, GALV. FOR W14 OR TS14 POLE	PENNFAB INC, MORRISVILLE, PA	EA	2
E0536–01	44–444–89342	JVCE0536	BACKING ANGLES FOR STATIC WIRE TO STATIC WIRE JUMPER CONNECTION, STEEL, GALV. FOR W8 POLE	PENNFAB INC, MORRISVILLE, PA	EA	2
E0536–03	44–444–89344	JVCE0536	BACKING ANGLES FOR STATIC WIRE TO STATIC WIRE JUMPER CONNECTION, STEEL, GALV. FOR W14 OR TS14 POLE	PENNFAB INC, MORRISVILLE, PA	EA	2
FP–01	– –	ET–51	4" XS STEEL PIPE, GALV., CUT TO 1–3/4" LENGTHS, FOR FILL PLATES	PENNFAB INC, MORRISVILLE, PA	IN	56
FP–02	– –	ET–51	1/2" FILL PLATE, STEEL GALV,	PENNFAB INC, MORRISVILLE, PA	EA	4
FP–03	– –	ET–51	3/4" FILL PLATE, STEEL GALV,	PENNFAB INC, MORRISVILLE, PA	EA	4
ST–L	– –	ET–50	6X4X1/2" STEEL ANGLE, LEFT SIDE, FOR COMPRESSION STRUT	PENNFAB INC, MORRISVILLE, PA	EA	4
ST–R	– –	ET–50	6X4X1/2" STEEL ANGLE, RIGHT SIDE, FOR COMPRESSION STRUT	PENNFAB INC, MORRISVILLE, PA	EA	4
WT9X23	– –	ET–51	WT9X23, STRUT CONNECTION PLATE	PENNFAB INC, MORRISVILLE, PA	EA	4

NOTES:

1. REFER TO SHEET 71 FOR BRIDGE BONDING AND GROUNDING BILL OF MATERIAL.

100% SUBMISSION

SHARON
MASKWONICUT STREET OVER AMTRAK/MBTA

STATE	FED. AID PROJ. NO.	SHEET NO.	TOTAL SHEETS
MA	-	79	86
PROJECT FILE NO.	608079		

CROSS SECTIONS

12+00

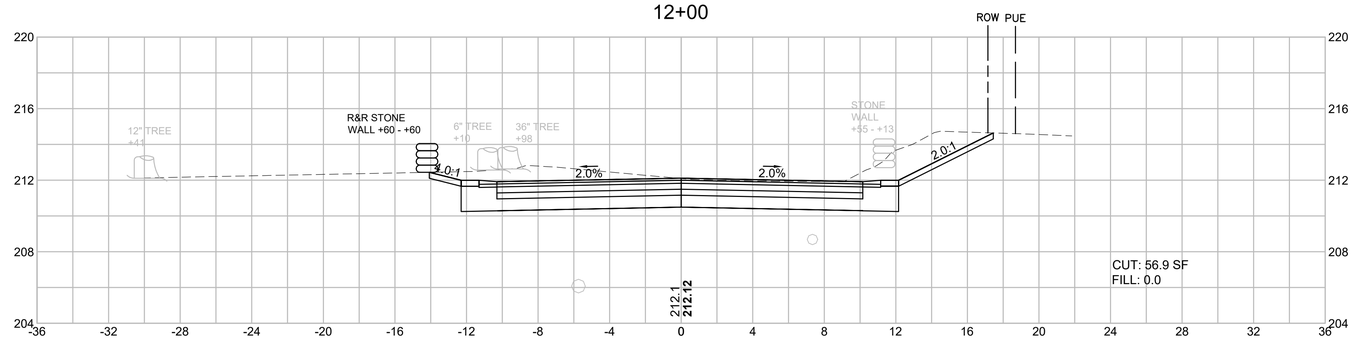

11+75

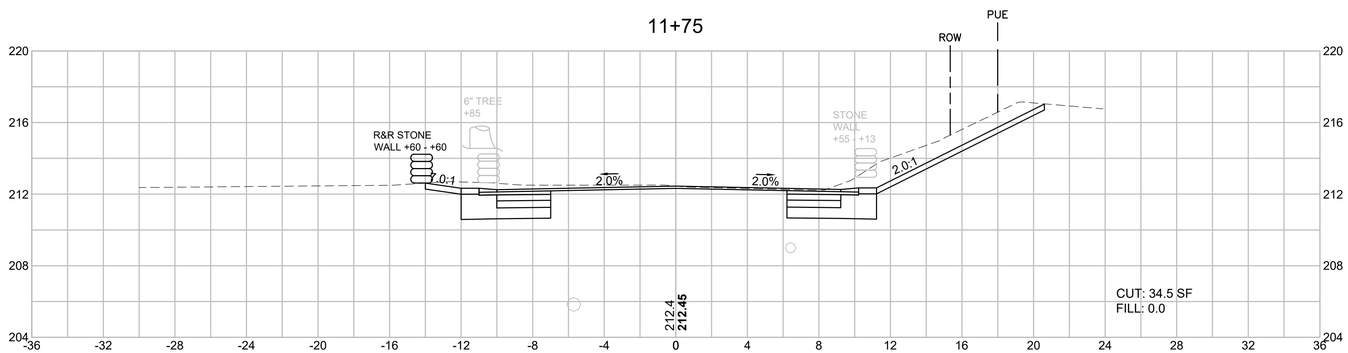

11+55.56

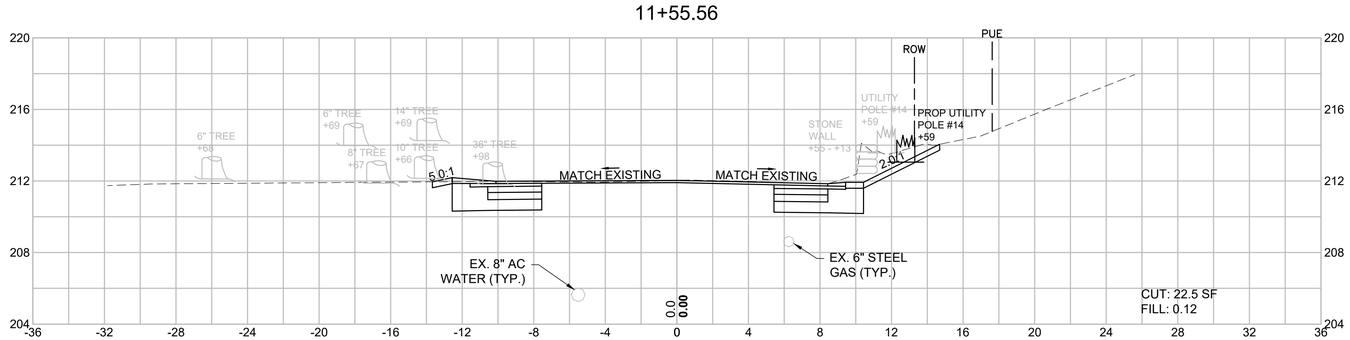

HOR. SCALE IN FEET
4 0 4 8
4 0 4 8
VER. SCALE IN FEET

Plotted on 19-Nov-2020 4:54 PM
CROSSSECTIONS.DWG

SHARON
MASKWONICUT STREET OVER AMTRAK/MBTA

STATE	FED. AID PROJ. NO.	SHEET NO.	TOTAL SHEETS
MA	-	80	86
PROJECT FILE NO.	608079		

CROSS SECTIONS

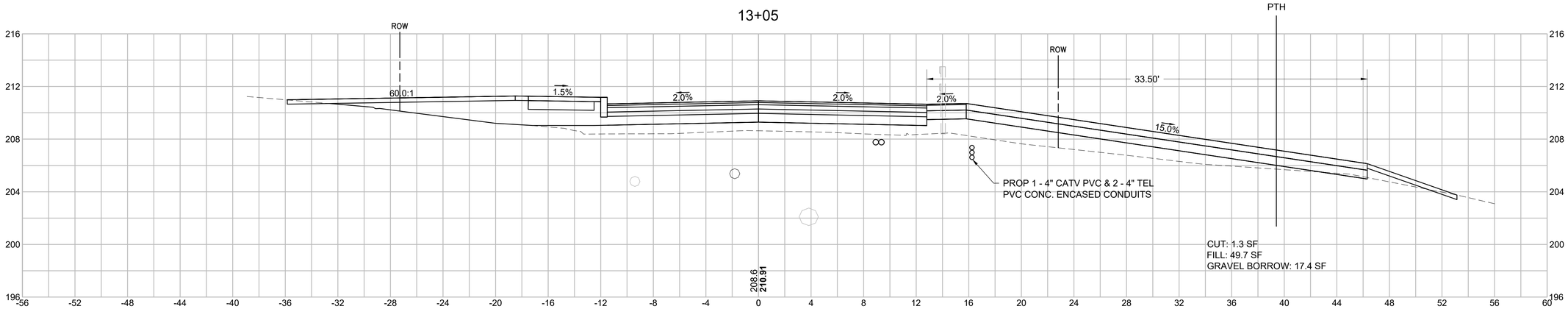

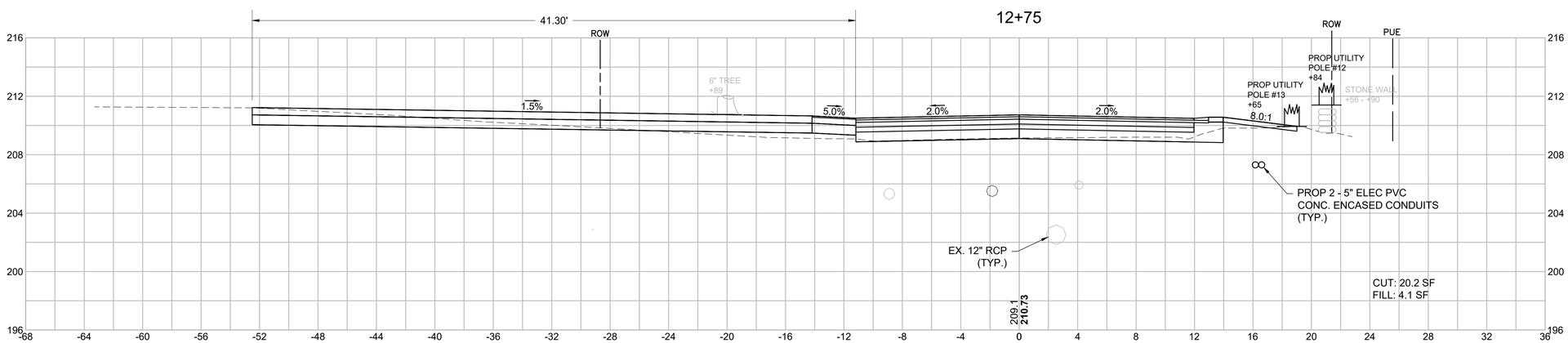

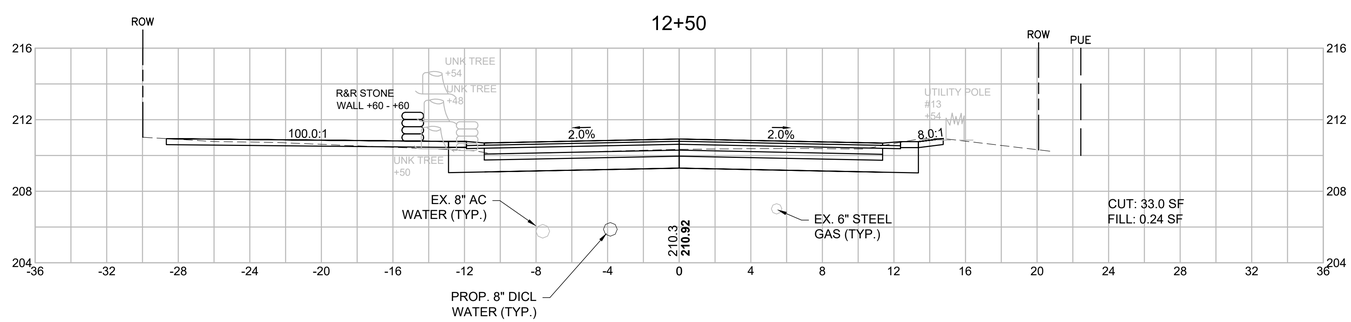

HOR. SCALE IN FEET
4 0 4 8
4 0 4 8
VER. SCALE IN FEET

Plotted on 19-Nov-2020 4:55 PM
CROSSSECTIONS.DWG

SHARON
MASKWONICUT STREET OVER AMTRAK/MBTA

STATE	FED. AID PROJ. NO.	SHEET NO.	TOTAL SHEETS
MA	-	81	86
PROJECT FILE NO.	608079		

CROSS SECTIONS

14+00

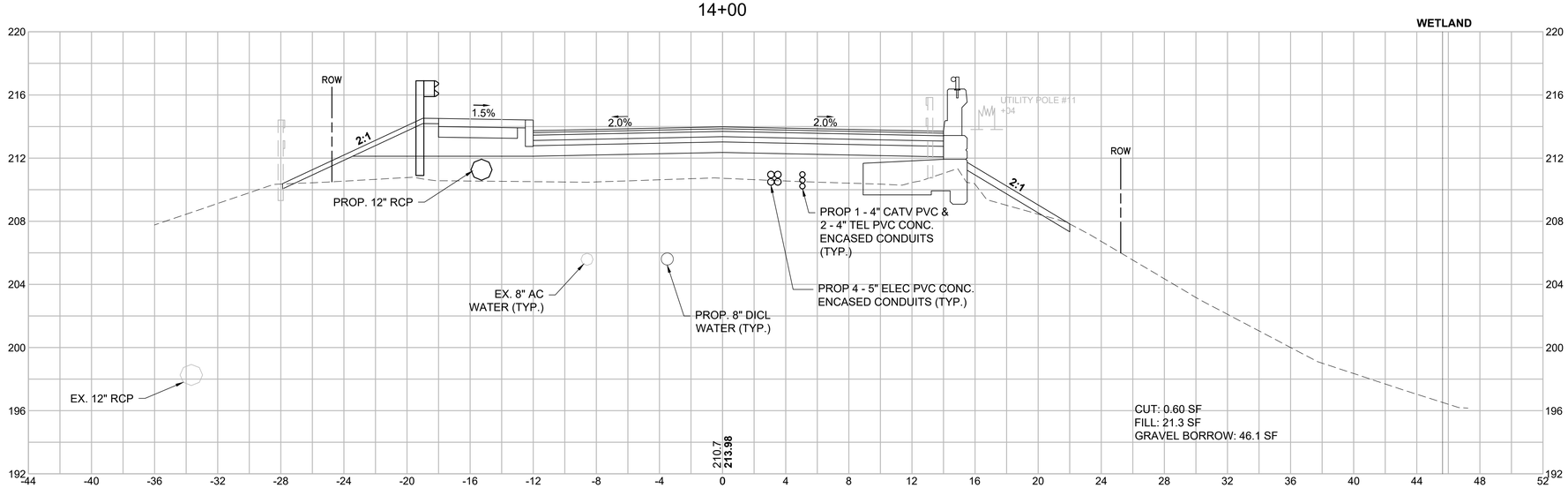

13+50

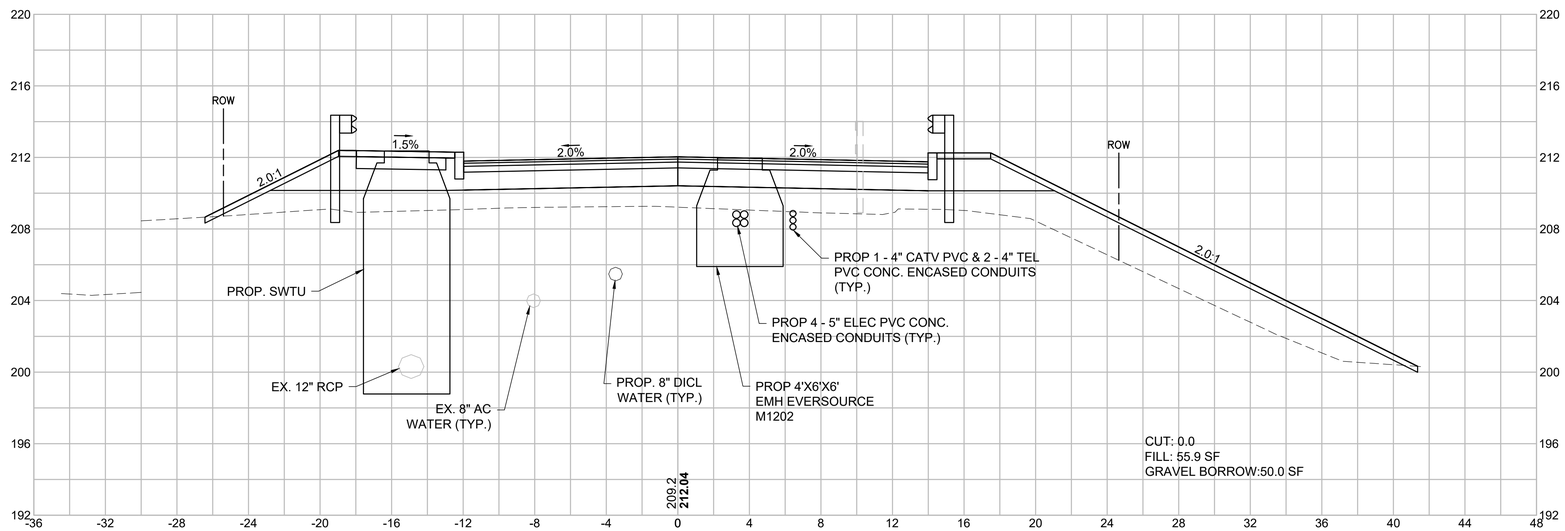

HOR. SCALE IN FEET
4 0 4 8
4 0 4 8
VER. SCALE IN FEET

CROSSSECTIONS.DWG Plotted on 19-Nov-2020 4:55 PM

SHARON
MASKWONICUT STREET OVER AMTRAK/MBTA

STATE	FED. AID PROJ. NO.	SHEET NO.	TOTAL SHEETS
MA	-	82	86
PROJECT FILE NO.	608079		

CROSS SECTIONS

14+50

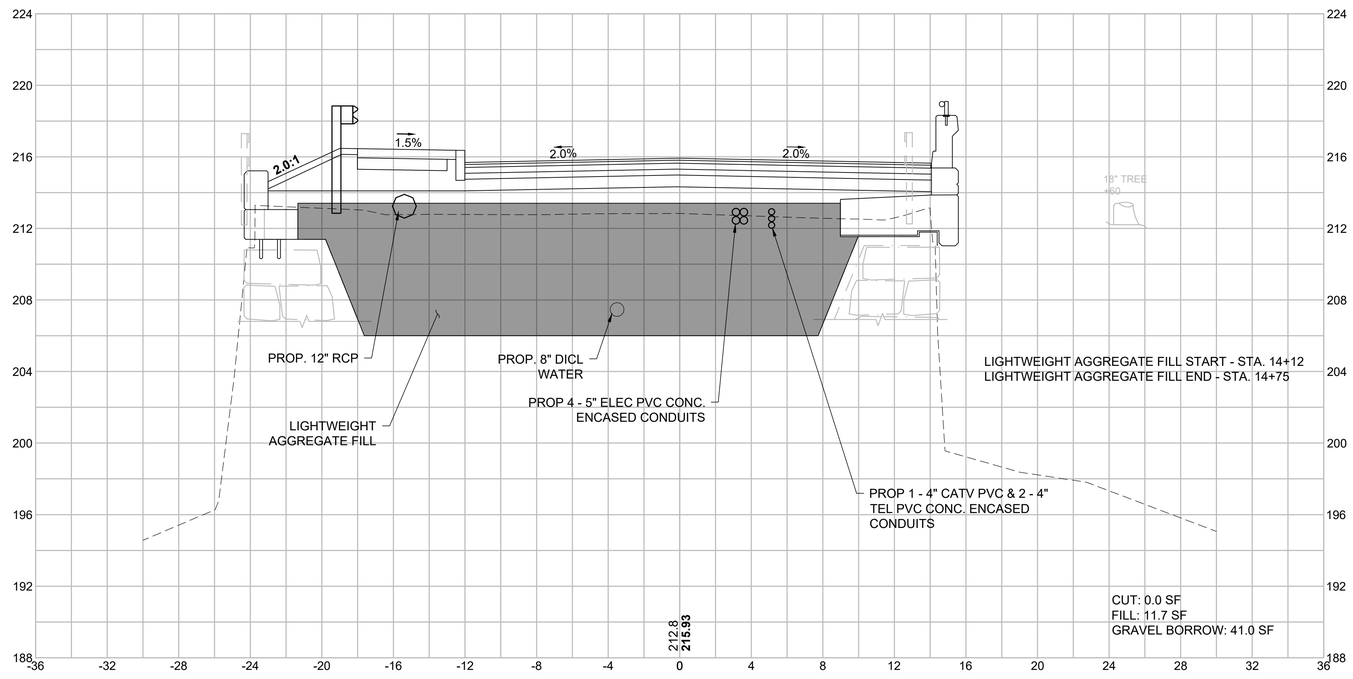

HOR. SCALE IN FEET

4 0 4 8

4 0 4 8

VER. SCALE IN FEET

SHARON
MASKWONICUT STREET OVER AMTRAK/MBTA

STATE	FED. AID PROJ. NO.	SHEET NO.	TOTAL SHEETS
MA	-	83	86
PROJECT FILE NO.	608079		

CROSS SECTIONS

15+50

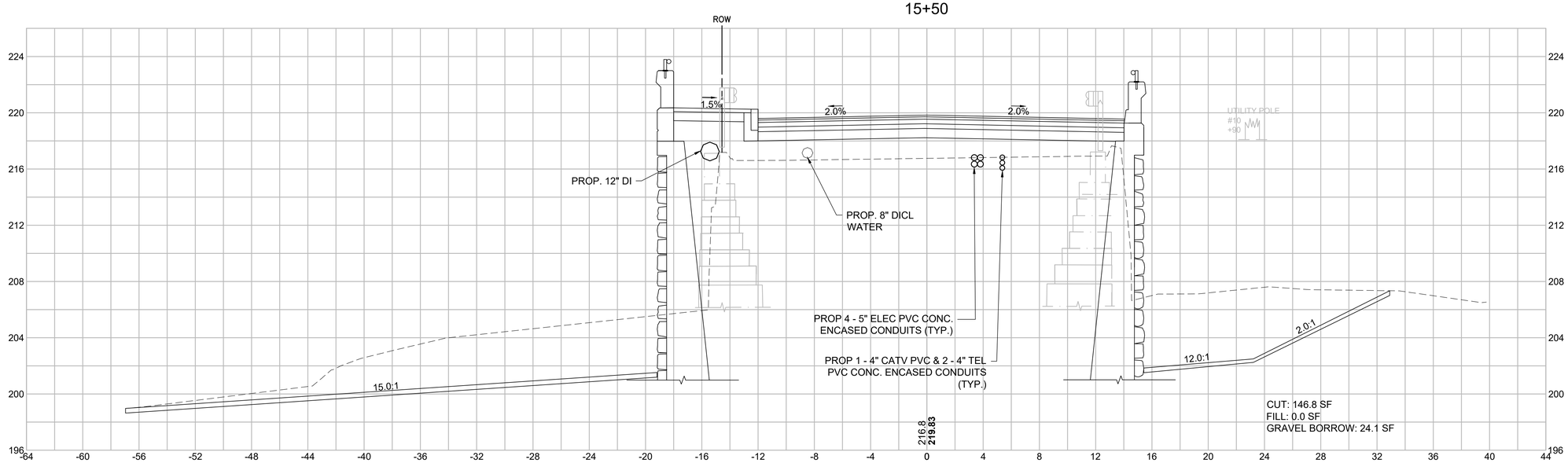

15+00

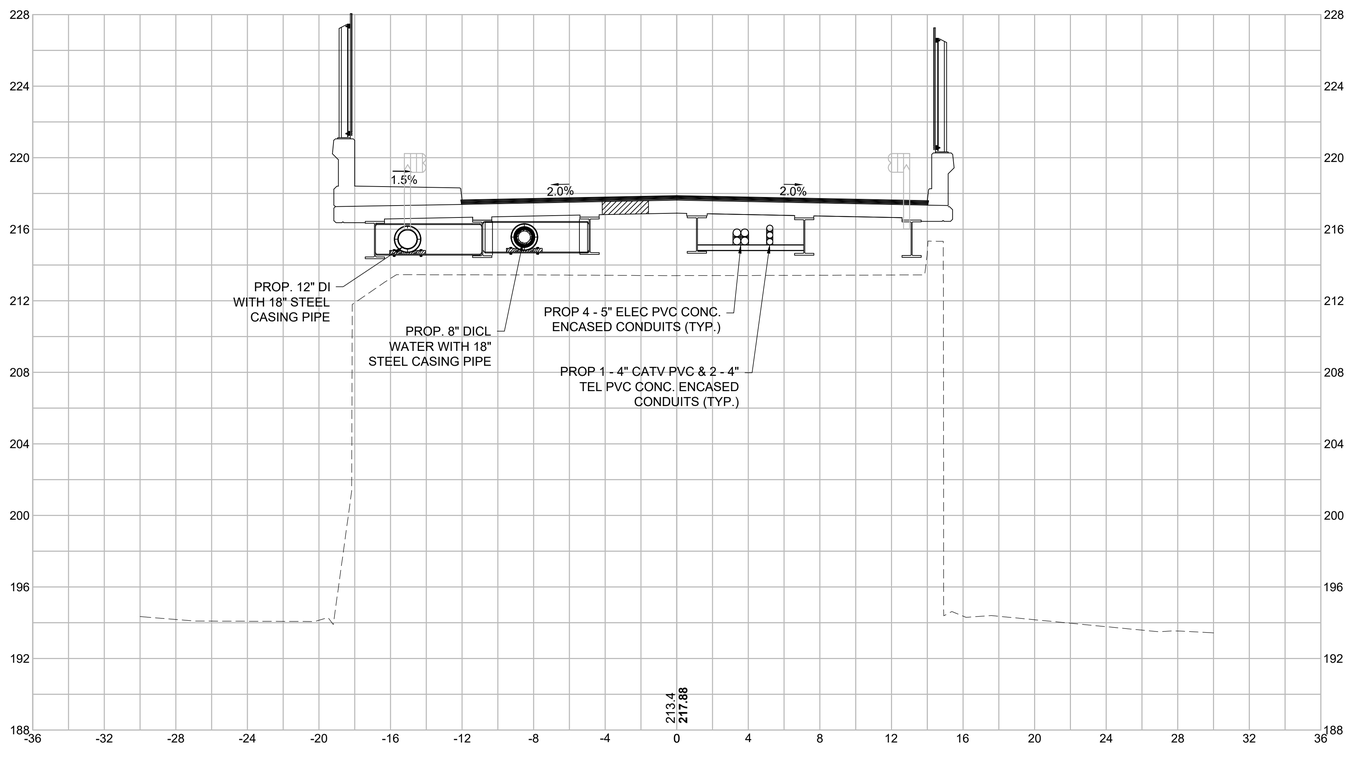

HOR. SCALE IN FEET
4 0 4 8
4 0 4 8
VER. SCALE IN FEET

CROSSSECTIONS.DWG Plotted on 19-Nov-2020 4:56 PM

SHARON
MASKWONICUT STREET OVER AMTRAK/MBTA

STATE	FED. AID PROJ. NO.	SHEET NO.	TOTAL SHEETS
MA	-	84	86
PROJECT FILE NO.	608079		

CROSS SECTIONS

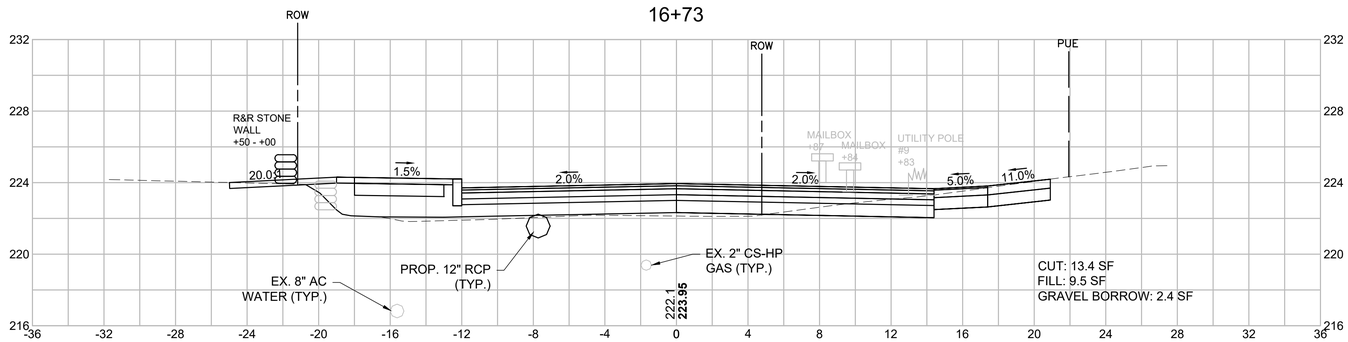

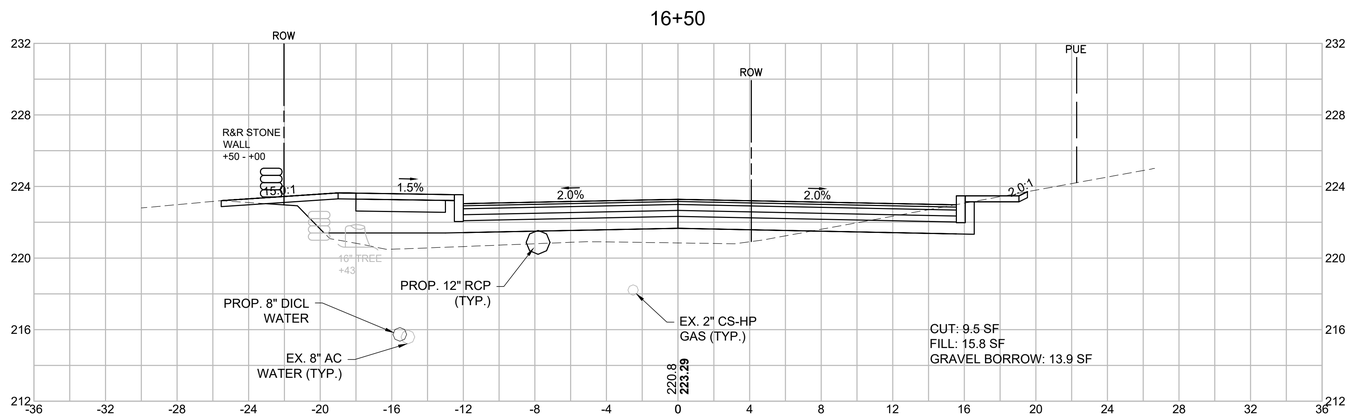

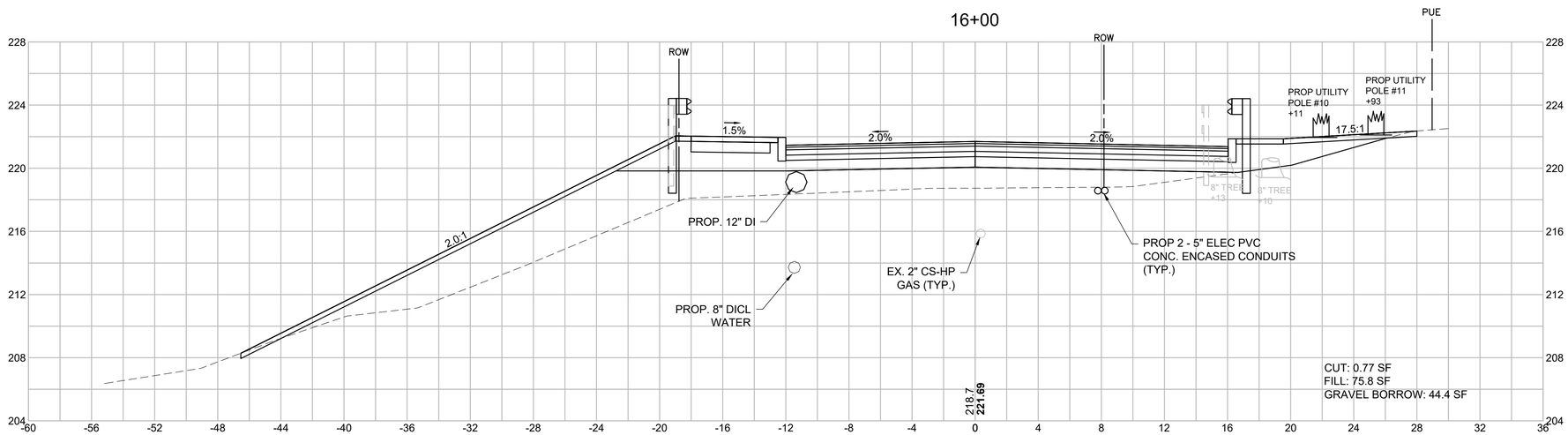

HOR. SCALE IN FEET
4 0 4 8
4 0 4 8
VER. SCALE IN FEET

Plotted on 19-Nov-2020 4:56 PM
CROSSSECTIONS.DWG

SHARON
MASKWONICUT STREET OVER AMTRAK/MBTA

STATE	FED. AID PROJ. NO.	SHEET NO.	TOTAL SHEETS
MA	-	85	86
PROJECT FILE NO.	608079		

CROSS SECTIONS

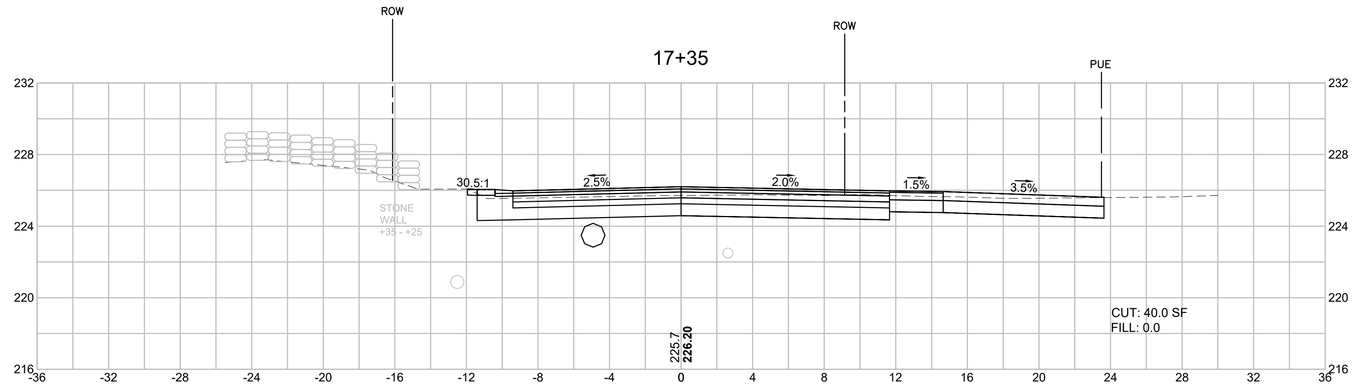

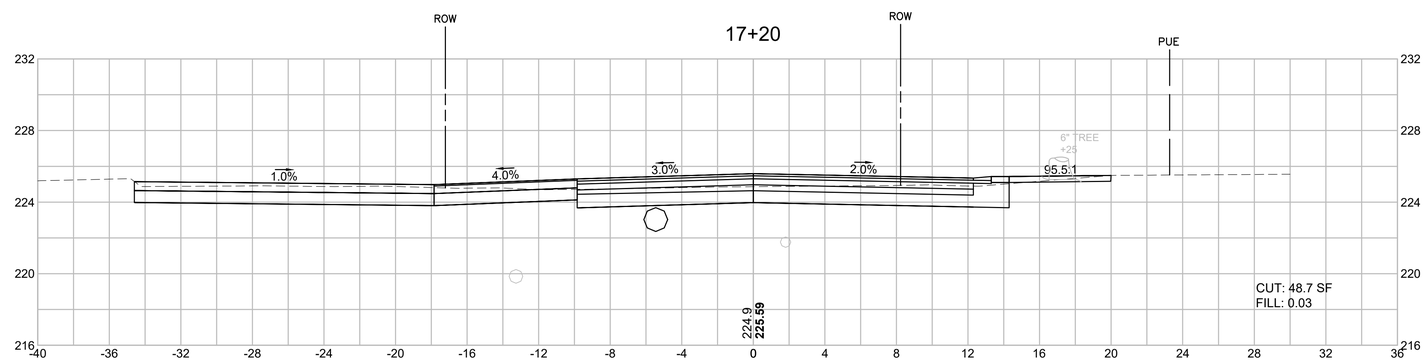

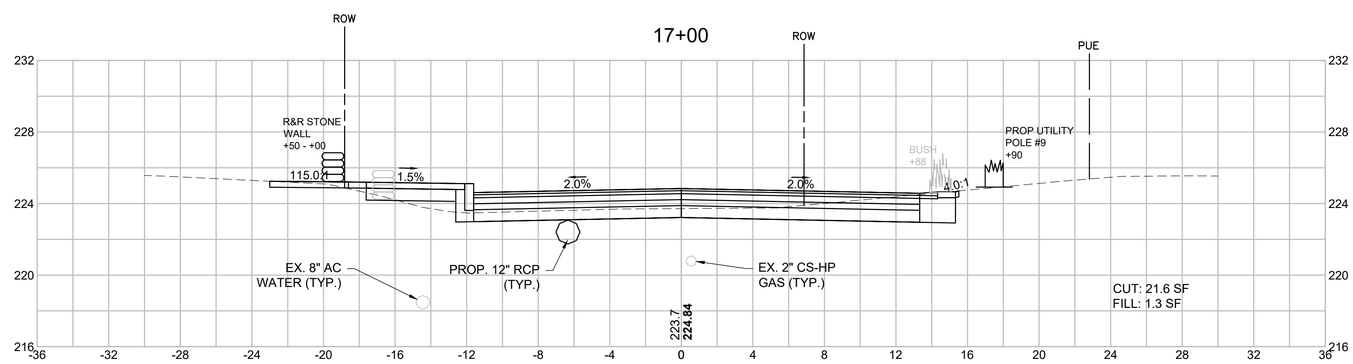

HOR. SCALE IN FEET
4 0 4 8
4 0 4 8
VER. SCALE IN FEET

Plotted on 19-Nov-2020 4:56 PM
CROSSSECTIONS.DWG

SHARON
MASKWONICUT STREET OVER AMTRAK/MBTA

STATE	FED. AID PROJ. NO.	SHEET NO.	TOTAL SHEETS
MA	-	86	86
PROJECT FILE NO.	608079		

CROSS SECTIONS

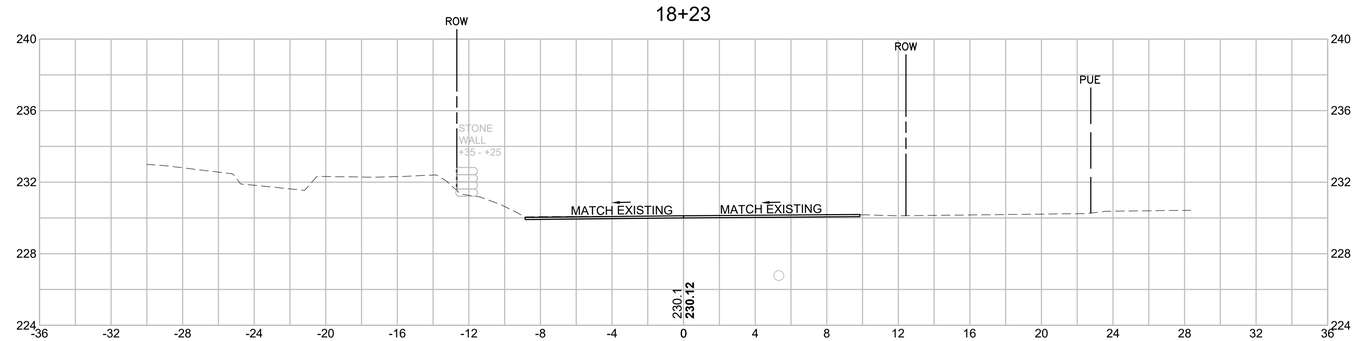

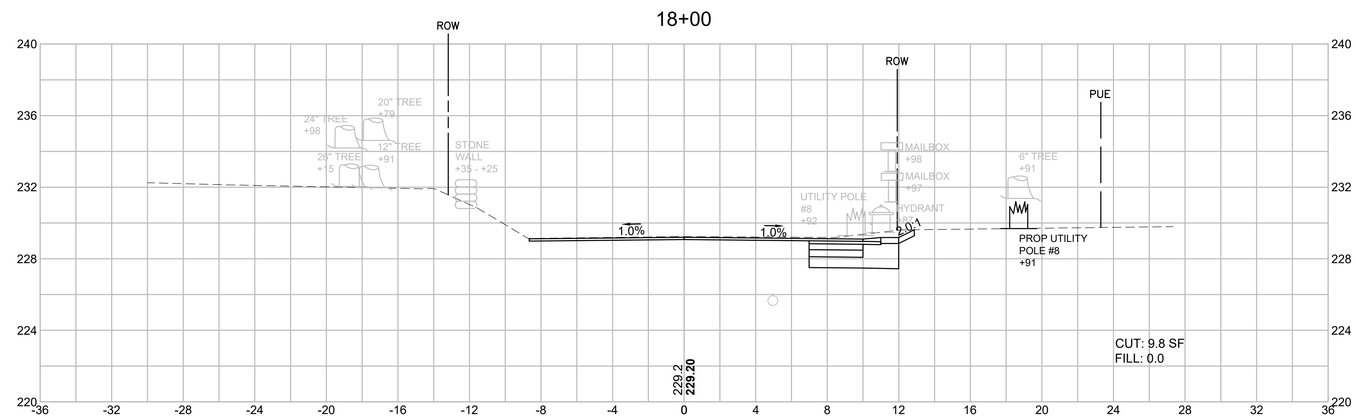

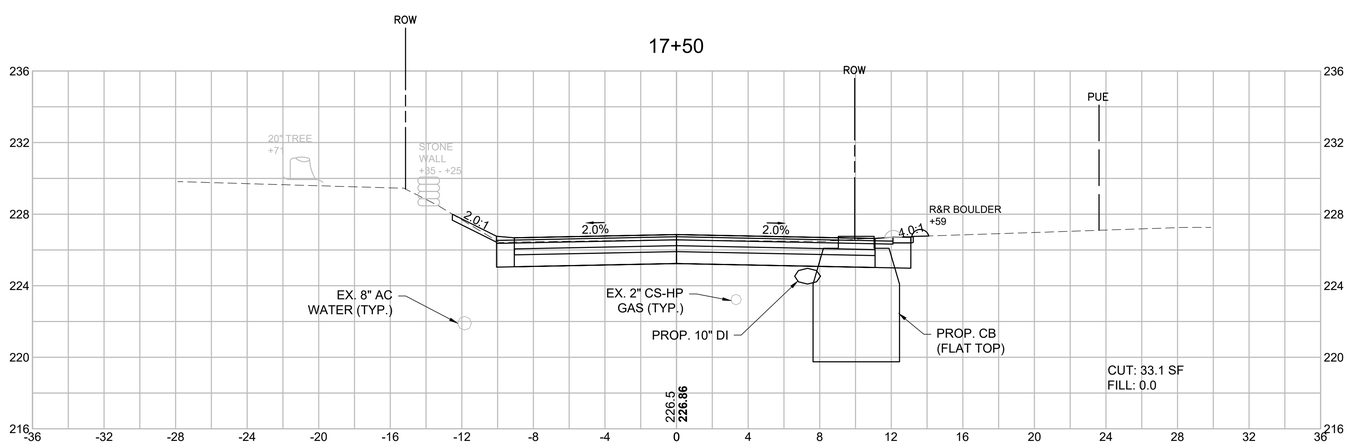

HOR. SCALE IN FEET
4 0 4 8
4 0 4 8
VER. SCALE IN FEET

CROSSSECTIONS.DWG Plotted on 19-Nov-2020 4:57 PM